Senior School Curriculum

2009

MAIN SUBJECTS

VOLUME 1

CENTRAL BOARD OF SECONDARY EDUCATION, DELHI

SENIOR SCHOOL CURRICULUM 2009

VOLUME 1

Effective from the academic session 2007 -2008 of Class XI
For the Board Examination to be held in 2009

CENTRAL BOARD OF SECONDARY EDUCATION

Shiksha Kendra, 2, Community Centre, Preet Vihar, Vikas Marg, Delhi-110092

C.B.S.E., Delhi-110092

February - 2007 :

Price: Rs. 140/-

Note: The Board reserves the right to amend the Syllabi and Courses as and when it deems necessary. The Schools are required to strictly follow the Syllabi and textbooks prescribed by the Board for the academic sessions and examinations concerned. No deviation is permissible.

Published by: Secretary, C.B.S.E, 'Shiksha Kendra', 2, Community Centre, Preet Vihar, Delhi-92

Designed by : Multigraphics, *5745/81, Regharpura, Karol Bagh, New Delhi, Ph.: 25783846*

Printed at:

भारत का संविधान

उद्देशिका

हम, भारत के लोग, भारत को एक सम्पूर्ण [1]प्रभुत्व-संपन्न समाजवादी पंथनिरपेक्ष लोकतंत्रात्मक गणराज्य बनाने के लिए, तथा उसके समस्त नागरिकों को:

सामाजिक, आर्थिक और राजनैतिक न्याय,
विचार, अभिव्यक्ति, विश्वास, धर्म
और उपासना की स्वतंत्रता,
प्रतिष्ठा और अवसर की समता

प्राप्त कराने के लिए,
तथा उन सब में,

व्यक्ति की गरिमा और [2] राष्ट्र की एकता
और अखण्डता सुनिश्चित करने वाली बंधुता

बढ़ाने के लिए

दृढ़संकल्प होकर अपनी इस संविधान सभा में आज तारीख 26 नवम्बर, 1949 ई॰ को एतद्द्वारा इस संविधान को अंगीकृत, अधिनियमित और आत्मार्पित करते हैं।

---

1. संविधान (बयालीसवां संशोधन) अधिनियम, 1976 की धारा 2 द्वारा (3.1.1977) से "प्रभुत्व-संपन्न लोकतंत्रात्मक गणराज्य" के स्थान पर प्रतिस्थापित।

2. संविधान (बयालीसवां संशोधन) अधिनियम, 1976 की धारा 2 द्वारा (3.1.1977 से), "राष्ट्र की एकता" के स्थान पर प्रतिस्थापित।

भाग 4 क

मूल कर्त्तव्य

51 क. मूल कर्त्तव्य – भारत के प्रत्येक नागरिक का यह कर्त्तव्य होगा कि वह –

(क) संविधान का पालन करे और उसके आदर्शों, संस्थाओं, राष्ट्रध्वज और राष्ट्रगान का आदर करें;

(ख) स्वतंत्रता के लिए हमारे राष्ट्रीय आंदोलन को प्रेरित करने वाले उच्च आदर्शों को हृदय में संजोए रखे और उनका पालन करे;

(ग) भारत की प्रभुता, एकता और अखंडता की रक्षा करे और उसे अक्षुण्ण रखे;

(घ) देश की रक्षा करे और आह्वान किए जाने पर राष्ट्र की सेवा करे;

(ङ) भारत के सभी लोगों में समरसता और समान भ्रातृत्व की भावना का निर्माण करे जो धर्म, भाषा और प्रदेश या वर्ग पर आधारित सभी भेदभाव से परे हों, ऐसी प्रथाओं का त्याग करे जो स्त्रियों के सम्मान के विरुद्ध हैं;

(च) हमारी सामाजिक संस्कृति की गौरवशाली परंपरा का महत्त्व समझे और उसका परीक्षण करे;

(छ) प्राकृतिक पर्यावरण की जिसके अंतर्गत वन, झील, नदी, और वन्य जीव हैं, रक्षा करे और उसका संवर्धन करे तथा प्राणिमात्र के प्रति दयाभाव रखे;

(ज) वैज्ञानिक दृष्टिकोण, मानववाद और ज्ञानार्जन तथा सुधार की भावना का विकास करे;

(झ) सार्वजनिक संपत्ति को सुरक्षित रखे और हिंसा से दूर रहे;

(ञ) व्यक्तिगत और सामूहिक गतिविधियों के सभी क्षेत्रों में उत्कर्ष की ओर बढ़ने का सतत प्रयास करे जिससे राष्ट्र निरंतर बढ़ते हुए प्रयत्न और उपलब्धि की नई उंचाइयों को छू ले।

THE CONSTITUTION OF INDIA

PREAMBLE

WE, THE PEOPLE OF INDIA, having solemnly resolved to constitute India into a [1]**SOVEREIGN SOCIALIST SECULAR DEMOCRATIC REPUBLIC** and to secure to all its citizens :

JUSTICE, social, economic and political;

LIBERTY of thought, expression, belief, faith and worship;

EQUALITY of status and of opportunity; and to promote among them all

FRATERNITY assuring the dignity of the individual and the [2] unity and integrity of the Nation;

IN OUR CONSTITUENT ASSEMBLY this twenty-sixth day of November, 1949, do **HEREBY ADOPT, ENACT AND GIVE TO OURSELVES THIS CONSTITUTION.**

---

1. Subs, by the Constitution (Forty-Second Amendment) Act. 1976, sec. 2, for "Sovereign Democratic Republic (w.e.f. 3.1.1977)
2. Subs, by the Constitution (Forty-Second Amendment) Act. 1976, sec. 2, for "unity of the Nation (w.e.f. 3.1.1977)

THE CONSTITUTION OF INDIA

Chapter IV A

Fundamental Duties

ARTICLE 51A

Fundamental Duties - It shall be the duty of every citizen of India-

(a) to abide the Constitution and respect its ideals and institutions, the National Flag and the National Anthem;

(b) to cherish and follow the noble ideals which inspired our national struggle for freedom;

(c) to uphold and protect the sovereignty, unity and integrity of India;

(d) to defend the country and render national service when called upon to do so;

(e) To promote harmony and the spirit of common brotherhood amongst all the people of India transcending religious, linguistic and regional or sectional diversities; to renounce practices derogatory to the dignity of women;

(f) to value and preserve the rich heritage of our composite culture;

(g) to protect and improve the natural environment including forests, lakes, rivers, wild life and to have compassion for living creatures;

(h) to develop the scientific temper, humanism and the spirit of inquiry and reform;

(i) to safeguard public property and to abjure violence;

(j) to strive towards excellence in all spheres of individual and collective activity so that the nation constantly rises to higher levels of endeavour and achievement.

Curriculum updation is a continuous process, as such the Board brings out the revised curricula every year. It is obligatory for the School and the students preparing for the Board's Examination of a particular year to follow the syllabi, courses and the books prescribed by it for that year. No deviation from the ones prescribed is permissible. All concerned are, therefore, strongly advised to purchase the curriculum prescribed for the year concerned from the CBSE Headquarters or its Regional Offices for their information and use. Orders with the required price and postage can be placed with the Store Keeper (Publications) at the Headquarters or with the Regional Office of the zone as the case may be. Readers are also advised to refer to the details given at the end of the publication. The syllabi and courses in Regional and Foreign Languages have been provided in the volume II printed separately which is also a priced publication.

CONTENTS

PART I
ELIGIBILITY REQUIREMENTS, SCHEME OF STUDIES AND SCHEME OF EXAMINATIONS

1. ELIGIBILITY OF CANDIDATES

1. Admission of Students to a school: Transfer/Migration of Students
Admission: General Conditions:

1.1 A student seeking admission to any class in 'School' will be eligible for admission to that class only if he:-

(i) has been studying in a school recognised by or affiliated to this Board or any other recognised Board of Secondary Education in India;

(ii) has passed qualifying or equivalent qualifying examination making him eligible for admission to that class;

(iii) satisfies the requirements of age limits (minimum and maximum) as determined by the State/ U. T. Government and applicable to the place where the school is located; and

(iv) produces:-

(a) the School Leaving Certificate/transfer certificate signed by the Head of the Institution last attended and countersigned;

(b) document(s) in support of his having passed the qualifying or equivalent qualifying examination; and

(c) Date of Birth Certificate issued by the Registrar of Births and Deaths, where-ever existing, as proof of date of birth.

Explanation:-

(a) A person who has been studying in an institution which is not recognised by this Board or by any other recognised Board of Secondary Education or by the State/ U. T. Government of the concerned place shall not be admitted to any class or a "School" on the basis of Certificate(s) of such unrecognised institutions attended by him earlier.

(b) Qualifying Examination' means an examination-the passing of which makes a student eligible for admission to a particular class; and 'equivalent examination' means an examination conducted by any recognised Board of Secondary Education/Indian University or an institution recognised by or affiliated to such Board/University and is recognised by the Board equivalent to the corresponding examination conducted by this Board or conducted by a "School" affiliated to/recognised by this Board.

1.2 No student migrating from a school in a foreign country other than the school affiliated to this Board, shall be eligible for admission unless an eligibility certificate in respect of such a student has been obtained from this Board. For obtaining eligibility certificate from the Board, the Principal of the School to which admission is being sought will submit to the Board full details of the case and relevant documents with his own remarks/ recommendations. The eligibility certificate will be issued by the Board only after the Board is satisfied that the course of study undergone and examination passed is equivalent to corresponding class of this Board.

1.3 No person who is under the sentence of rustication or is expelled from any Board/ University/School or is debarred from appearing in the examination for whatever reason by any Board/University shall be admitted to any class in a School affiliated to this Board.

1.4 No student shall be admitted or promoted to any subsequent higher class in any school unless he has completed the regular course of study of the class to which he was admitted at the beginning of the academic session and has passed the examination at the end of the concerned academic session, qualifying him for promotion to the next higher class.

1.5 No student shall be admitted in Class XI and above in a school affiliated with the Board after 31st day of August of the year except with prior permission of the Chairman, CBSE/Competent Authority as may have been defined in the State/Union Territory Education Acts. The application for permission to grant admission after 31st August shall be routed through the Principal of the school specifying the reasons which are unavoidable. The candidate shall complete the required 'percentage of attendance (75%) for Class XI & XII as per Examination Bye-Laws of the Board to make him/her eligible for the examinations. In such cases where the admission by the candidate could not be taken in a higher class by the stipulated date because of the late declaration of result by the Board such permission would not be required, provided the candidate applied for admission within a fortnight of the declaration of the result.

1.6 Admission: Specific Requirements

Admission to Class XI in a school shall be open only to such a student who has passed:-

(a) Secondary School Examination (Class X Examination) conducted by this Board; or

(b) An equivalent examination conducted by any other recognised Board of Secondary Education/Indian University and recognised by this Board as equivalent to its Secondary School Examination.

1.7 Admission to Class XII:

(i) No admission shall be taken in Class XII directly. Provided further that admission to Class XII in a school shall be open only to such a student who:

(a) has completed a regular course of study for Class XI; and ,

(b) has passed Class XI examination from a school affiliated to this Board.

(ii) A student who has completed a regular course of study for Class XI and has passed Class XI examination from an institution recognised by/affiliated to any recognised Board in India, other than this Board, can be admitted to a school only on transfer of the parent(s) or shifting of their families from one place to another, after procuring from the student the mark sheet and the Transfer Certificate duly countersigned by the Educational Authorities of the Board concerned. In case of such admissions the school would obtain post facto approval of the Board within one month of admission of the student.

(iii) Notwithstanding any thing contained in paras 1 to 5 of this Byelaws, the admission of students passing qualifying examination from an examining body outside India shall be regulated according to the provisions contained in byelaw 6.2 of this chapter; provided that the condition of completing regular course of study for class IX and XI is satisfied in cases of admission to Class X and Class XII respectively.

1.8 Admission Procedure

(i) Admission register in the form prescribed by the State Government concerned/ Kendriya Vidyalaya Sangathan/Navodaya Vidyalaya Samiti as the case may be, shall be maintained by the "School" where the name of every student joining "The School" shall be entered.

(ii) Successive numbers must be allotted to students on their admission and each student should retain this number throughout the whole of his career in the school. A student returning to the school after absence of any duration shall resume admission on his original number.

(iii) If a student applying for admission to a school has attended any other school, an authenticated copy of Transfer Certificate in the format given in the Examination Bye-Laws from his last school must be produced before his name can be entered in the admission Register.

(iv) In no case shall a student be admitted into a class higher than that for which he is entitled according to the Transfer Certificate.

(v) A student shall not be allowed to migrate from one “School” to another during the session after his name has been sent up for the examination of the Board. This condition may be waived only in special circumstances by the Chairman.

(vi) A student leaving his school at the end of a session or who is permitted by the school during the session shall on a payment of all dues, receive an authenticated copy of the Transfer Certificate up-to-date. A duplicate copy may be issued if the Head of the institution is satisfied that the original is lost but it shall always be so marked.

(vii) In case a student from an institution not affiliated to the Board seeks admission in a school affiliated to the Board, such a student shall produce a transfer certificate duly countersigned by an authority as indicated in the format given in Examination Bye-Laws.

(viii) If the statement made by the parent or guardian of a student or by the student himself/herself, if he/she was major at the time of his/her admission to a school, is found to contain any wilful misrepresentation of facts regarding the student’s career, the head of the institution may punish him/her as per provision of the Education Act of the State/Union Territory or Kendriya Vidyalaya Sangathan/ Navodaya Vidyalaya Samiti Rules, as the case may be, respectively and report the matter to the Board.

1.9 Admission to Examinations

General

No candidate who has been expelled or is under the punishment or rustication or is debarred for appearing in or taking an examination for any reason whatsoever, shall be admitted to any examination of the Board.

All India/Delhi Senior School Certificate Examinations:

1.10 Academic Qualification for Undertaking Examinations:

(i) A candidate for All India/Delhi Senior School Certificate Examination should have:

(a) passed the Secondary School Examination (Class X) of this Board or an equivalent examination from any other recognised Board/University at least two years earlier than the year in which he/she would take Senior School Certificate Examination (Class XII) of the Board; and

(b) secured a grade higher than grade E in each of the subjects of internal assessment at Secondary School Examination (Class X) referred to at (a) above.

1.11 Admission to Examinations: Regular Candidates

All India/Delhi Senior School Certificate Examination will be opened to such regular candidates who have submitted their duly completed application for admission to the concerned examination, and/or his name in the manner prescribed by the Board, along with the prescribed fee forwarded to the Controller of Examinations by the Head of the Institution/School with the following duly certified by such head:-

(i) that he possesses the academic qualifications as laid down in Examination Bye-Laws;

(ii) that he has not passed equivalent or higher examination of any other Board or University;

(iii) that he is on the active rolls of the School;

(iv) that he has completed a "regular Course of study" as defined and detailed in Examination Bye-Laws in a school in the subjects in which he would appear in the Examination;

(v) that he bears a good moral character and is of good conduct; and

(vi) that he satisfies all other provisions applicable to him/her, of the Examination Bye-Laws and any other provision made by the Board by governing admission to the examination concerned, if any.

1.12 (i) It is mandatory upon a school affiliated to Board to follow the Examination Bye Laws of the Board in toto.

(ii) No affiliated school shall endeavor to present the candidates who are not on its roll nor will it present the candidates of its unaffiliated branch/schools to any of the Board's Examinations.

(iii) If the Board has reasons to believe that an affiliated school is not following the sub-section (i) and (ii) of this section, the Board will resort to penalties as deemed fit.

1.13 A Regular Course of Study

(i) The expression "a regular course of study" referred to in the Bye-Law means at least 75% of attendance in the classes held counted from the day of commencing teaching of Class XI/XII, as the case may be, upto the 1st of the Month preceding the month in which the examination of the School / Board commences. Candidates taking up a subject(s) involving practicals shall also be required to have put in at least 75% of the total attendance for practical work in the subject in the laboratory. Heads of institutions shall not allow a candidate who has offered subject(s) involving practicals to take the practical examination(s) unless the candidates fulfil the attendance requirements as given in this Rule.

(ii) The candidates who had failed in the same examination in the preceding year and who rejoins Class XI/XII shall be required to put in 75% of attendance calculated on the possible attendance from the 1st of the month following the publication of the results of that examination by the School/Board upto the 1st of the month preceding the month in which the examination of the School / Board commences.

(iii) In the case of migration from other institutions, attendance at the institution/school recognised by the Education Department of the State/Union Territory from which the candidate migrates will be taken into account in calculating the required percentage of attendance.

1.14 Requirement of Attendance in Subjects of Internal Assessment

(i) No student from a School affiliated to the Board shall be eligible to take the examination unless he has completed 75% of attendance counted from the opening of Class XI/XII up to the 1st of the month preceding the month in which the examination commences in the subjects of internal assessment.

(ii) Exemption from W.E./ Art Education/P & HE may be granted to a candidate on medical grounds provided the application is supported by a certificate given by a Registered Medical Officer of the rank not below that of Asstt. Surgeon and forwarded by the Head of the School with his recommendations.

(iii) The Chairman shall have powers to condone shortage of attendances in subjects of internal assessment.

1.15 Rules for Condonation of shortage of Attendance

(i) If a candidate's attendance falls short of the prescribed percentage, the Head of the School may submit his name to the Board provisionally. If the candidate is still short of the required percentage of attendance within three weeks of the commencement of the examination, the Head of the Institution shall report the case to the Regional Officer concerned immediately. If in the opinion of the Head of the Institution, the candidate deserves special consideration, he may submit his recommendation to the Regional Officer concerned not later than three weeks before the commencement of the examination for condonation of shortage in attendance by the Chairman, CBSE, who may issue orders as he may deem proper. The Head of the School in his letter requesting for condonation of shortage in attendance,

should give the maximum possible attendance by a student counted from the day of commencing teaching of Class XII (beginning of the session) upto the 1st of the month preceding the month in which the examination of the Board commences, attendance by the candidate in question during the aforesaid period and the percentage of attendance by such a candidate during the aforesaid period.

(ii) Shortage upto 15% only may be condoned by the Chairman. Cases of candidates with attendance below 60% in Class XII shall be considered for condonation of shortage of attendance by the Chairman only in exceptional circumstances created on medical grounds, such as candidate suffering from serious diseases like Cancer, AIDS, T.B. or any other disease or injury requiring long period of hospitalization.

(iii) The Principal shall refer a case of shortage within the above prescribed limit of condonation to the Board, either with the recommendations or with valid reasons for not recommending the case.

(iv) The following may be considered valid reasons for recommending the cases of the candidates with attendance less than the prescribed percentage:

(a) prolonged illness;

(b) loss of Father/Mother or some other such incident leading to his absence from the school and meriting special considerations;

(c) any other reason of similar serious nature; and

(d) authorised participation in sponsored tournaments and Sports Meets of not less than inter school level and NCC/NSS Camps including the days of journeys for such participation shall be counted as full attendance.

1.16 Detaining of Eligible Candidates

In no case the Heads of affiliated schools shall detain eligible candidates from appearing at the examination of the Board.

1.17 Private Candidates

Definition. Refer Examination Bye-Laws.

1.18 Persons eligible to appear as 'Private Candidates' at Delhi Senior School Certificate (Class XII) Examination:

(i) A candidate who had failed at the Delhi Senior School Certificate Examination of the Board will be eligible to reappear at a subsequent examination as private candidate in the syllabus and text books as prescribed for the examination of the year in which he/she will reappear.

(ii) The following categories of candidates shall also be eligible to appear as private candidates at the Delhi Senior School Certificate Examination of the Board on the conditions laid down below:-

(a) teachers serving in educational institutions affiliated to the Board, who have already passed Secondary or an equivalent examination at least two years

before taking the Senior School Certificate Examination. Teacher candidates shall submit their application form along with a certificate by the Head of School in which they are serving duly countersigned by the Director of Education of the State/Union Territory concerned to the Regional Officer of the Board of the region in which the teacher is serving;

(b) women candidates who are bonafide residents of the National Capital Territory of Delhi and have passed the Delhi Secondary or an equivalent examination at least two years before appearing at the Senior School Certificate examination subject to conditions mentioned in rule 1.18 (iii); and

(c) physically handicapped students having passed the Secondary School Examination or its equivalent at least two years before appearing ,at the Senior School Certificate Examination on producing reasonable evidence of having deficiency to attend normal institutions for the purpose of studies.

(iii) Women/handicapped private candidates shall be required to satisfy the following additional conditions:-

(a) that they have privately pursued the prescribed course of studies under proper guidance;

(b) that they are unable to join a Senior Secondary School affiliated to the Board or there are such other reasons compelling them to appear at the examination as a private candidate.

1.19 Persons eligible to appear as 'Private Candidates' at All India Senior School Certificate Examination (Class XII)

(i) A candidate who had failed at the All India Senior School Certificate Examination of the Board will be eligible to reappear at a subsequent examination as a private candidate in the syllabus and text books as prescribed for the examination of the year in which he will reappear.

(ii) Teachers serving in educational institutions affiliated to the Board who have already passed Secondary or an equivalent examination at least two years before taking the Senior School Certificate Examination. Teacher candidates shall submit their application form along with a certificate by the Head of school in which they are serving duly countersigned by the Director of the State/Union Territory concerned to the Regional Officer of the Board of the region in which the teacher is serving.

1.20 Procedures for submission of Applications of Private Candidates at All India/Delhi Senior School Certificate Examination (Class XII)

(i) A private candidate must submit to the Regional Officer of the Board within the prescribed limit an application in the form prescribed together with the prescribed fee for the examination and three copies of passport size photographs duly signed, by the candidate and counter signed in the case of teacher by the authorities mentioned in Rule 1.18 (ii) (a) or 1.19 (ii) and in case of others a member of the Governing Body of the Board or Head of a School affiliated to the Board.

(ii) If the application of a private candidate is received after the prescribed date, he shall pay late fee as prescribed.

(iii) When a private candidate's application for admission to the examination is rejected, the examination fee including late fee if any, paid by him less Rs. 10/- or the amount as decided by the Chairman from time to time, will be refunded to him, provided that in the case of candidates whose applications have been rejected on account of the candidate's producing a false certificate or making a false statement in the application, the full amount of fee shall be forfeited.

(iv) Private candidates shall not be allowed to offer for their examination, a subject (even if the subject is recognised for the examination) which is not being taught in an affiliated school.

(v) Private candidates shall not be allowed to offer such subjects for the examinations which involve practical work except in case of candidates who had failed earlier and who had put in a regular course of study at an institution affiliated to the Board in the previous academic year. However, notwithstanding this condition, female candidates, may offer Home Science with practical.

(vi) Those regular candidates who have failed to obtain promotion to class XII of the school affiliated to the Board or any other recognised Board shall not be admitted to the Senior School Certificate Examination of the Board as private candidates.

(vii) Every year, in the beginning of the session, the Heads of School shall send to the Regional Officer concerned, a list of female and handicapped students who have been detained in Class XI containing student's name, date of birth, the name of his father or guardian and the place of residence.

1.21 Rules for Change in Subject

(i) Change of subject(s) in class XI may be allowed by the Head of the School but not later than 31st of October of that academic session.

(ii) No candidate shall be permitted to change his subject of study after passing Class XI.

(iii) The candidate shall not offer a subject in Class XII which he has not studied and passed in Class XI.

(iv) Notwithstanding anything contained in the rule 1.21 (ii) & (iii) Chairman shall have the powers to allow a change in subject(s) to avoid undue hardship to the candidate provided such a request for change is made before 30th September.

1.22 Submission of Migration Certificate by Private/Teacher Candidates for All India/ Delhi Senior School Certificate Examination.

The candidates who have passed the Secondary or equivalent examination from other recognised Board/University shall be required to submit Migration Certificate from the concerned Board/University along with the examination form. However, in case a Migration Certificate is not received fifteen days before the commencement of the examination, the candidature of a candidate shall be cancelled and the admit card for appearance at the examination shall not be issued to him by the Board.

2. SCHEME OF EXAMINATIONS AND PASS CRITERIA

2.1 General Conditions

(i) The Scheme of Examinations and Pass Criteria for All India/Delhi Senior School Certificate Examination conducted by the Board, shall be as laid down from time to time.

(ii) Class XI examination shall be conducted internally by the schools themselves.

(iii) The Board will conduct the external examination at the end of Class XII.

(iv) Class XII examination will be based on the syllabi as prescribed by the Board for Class XII from time to time.

(v) Number of papers, duration of examination and marks for each subject/paper will be as specified in the curriculum for the year.

(vi) The examination would be conducted in theory as well as in practicals, depending upon the nature of the subject(s) and the marks/grades allotted shall be as prescribed in the curriculum.

(vii) Marks/grades shall be awarded for individual subjects and the aggregate marks shall not be given.

2.2 Grading

(i) Assessment of theory/practical papers in external subjects shall be in numerical scores. In addition to numerical scores, the Board shall indicate grade in the marks sheets issued to the candidates in case of subjects of external examinations. In case of internal assessment subject only grades shall be shown.

(ii) Letter grades on a nine-point scale shall be used.

(iii) The grades shall be derived from scores in case of subjects of external examination. In case of subjects of internal assessment, they shall be awarded by the schools.

(iv) The qualifying marks in each subject of external examination shall be 33% at Senior School Certificate Examination. However, at Senior School Certificate Examination, in a subject involving practical work, a candidate must obtain 33% marks in the theory and 33% marks in the practical separately in addition to 33% marks in aggregate, in order to qualify in that subject.

(v) For awarding the grades, the Board shall put all the passed students in a rank order and will award grades as follows:

A-I Top 1/8th of the passed candidates

A-2 Next 1/8th of the passed candidates

B-1 Next 1/8th of the passed candidates

B-2 Next 1/8th of the passed candidates

C-l Next 1/8th of the passed candidates

C-2 Next 1/8th of the passed candidates

D-l Next 1/8th of the passed candidates

D-2 Next 1/8th of the passed candidates

E Failed Candidates

NOTES:

(a) Minor variation in proportion of candidates to adjust ties will be made.

(b) In case of a tie, all the students getting the same score, will get the same grade. If the number of students at a score point need to be divided into two segments, the smaller segment will go with the larger.

(c) Method of grading will be used in subjects where the number of candidates who have passed is more than 500.

(d) In respect of subjects where total number of candidates passing in a subject is less than 500, the grading would be adopted on the pattern of grading and distribution in other similar subjects.

2.3 Merit Certificates

(i) The Board will award Merit Certificates in each subject to the top 0.1 % of candidates passing that subject, provided that they have passed the examination as per the pass criteria of the Board.

(ii) The number of Merit Certificates in a subject, will be determined by rounding of the number of candidates passing the subject to the nearest multiple of thousand. If the number of candidates passing a subject is less than 500, no merit certificate will be issued.

(iii) In the matter of a tie, if one student gets a Merit Certificate, all candidates getting that score will get the Merit Certificate.

2.4 Scheme of Examination (Senior School Certificate Examination)

(i) The Board shall conduct examination in all subjects except General Studies, Work Experience, Physical and Health Education, which will be assessed internally by the schools.

(ii) In all subjects examined by the Board, a student will be given one paper each carrying 100 marks for 3 hours. However, in subjects requiring practical examination, there will be a theory paper and practical examinations as required in the syllabi and courses.

(iii) In Work Experience, General Studies and Physical and Health Education, the Schools will maintain cumulative records of student's periodical achievements and progress during the year. These records are subject to the scrutiny of the Board as and when deemed fit.

(iv) A candidate from a recognised school who has some physical deformity or is otherwise unable to take part in Work Experience and Physical and Health Education, may be granted exemption by the Chairman on the recommendation of the Head of the institution, supported by the medical certificate from a Medical Officer of the rank not below an Assistant Surgeon.

(v) Private/Patrachar Vidyalaya and candidates sponsored by Adult School shall be exempted from Work Experience, General Studies and Physical and Health Education.

(vi) A candidate may offer an additional subject which can be either a language at elective level or another elective subject as prescribed in the Scheme of Studies, subject to the conditions laid down in the Pass Criteria.

2.5 Pass Criteria (Senior School Certificate Examination)

(i) A candidate will be eligible to get the pass certificate of the Board, if he/she gets a grade higher than E in all subjects of internal assessment unless he/she is exempted. Failing this, result of the external examination will be with held but not for a period of more than one year.

(ii) In order to be declared as having passed the examination, a candidate shall obtain a grade higher than E (i.e. at least 33% marks) in all the five subjects of external examination in the main or at the end of the compartmental examination. The pass marks in each subject of external examination shall be 33%. In case of a subject involving practical work a candidate must obtain 33% marks in theory and 33% marks in practical separately in addition to 33% marks in aggregate in order to qualify in that subject.

(iii) No overall division/distinction/aggregate shall be awarded.

(iv) In respect of a candidate offering an additional subject, the following norms shall be applied:

(a) A language offered as an additional subject may replace a language in the event of a candidate failing in the same provided after replacement the candidate has English/ Hindi as one of the languages.

(b) An elective subject offered as an additional subject may replace one of the elective subjects offered by the candidate. It may also replace a language provided after replacement the candidate has English/Hindi as one of the languages.

(c) Additional language offered at elective level may replace an elective subject provided after replacement, the number of languages offered shall not exceed two.

(v) Candidates exempted from one or more subjects of internal examination shall be eligible for appearing in external examination and result shall be declared subject to fulfilment of other conditions laid down in the Pass Criteria.

(vi) In order to be declared as having passed the Class XI Examination a candidate shall obtain 33% marks in all the subjects. The pass marks in each subject of examination shall be 33%. In case of subject involving practical work a candidate must obtain 33% marks in theory and 33% in practical separately in addition to 33% marks in aggregate in order to qualify in that subject. (Rule 40.1)

2.6 Eligibility for Compartment in Senior School Certificate Examination

A candidate failing in one of the five subjects of external examination shall be placed in compartment in that subject provided he/she qualifies in all the subjects of internal assessment.

2.7 Compartment Examination for Senior School Certificate Examination

(i) A candidate placed in compartment in Senior School Certificate examinations may reappear in 5 compartmental chances i.e. first chance in the compartmental examination to be held in July/August the same year, second chance in March/April next year, third chance in July/August the next year and may further avail himself/herself of the fourth and fifth chances at the examinations to be held in March/April and July/August of another year. The candidate will be declared 'Pass' provided he/she qualifies the compartmental subject/ subjects in which he/she had failed. Rule 42(i)

(ii) A candidate who does not appear or fails at one or all the chances of compartment shall be treated to have failed in the examination and shall be required to reappear in all the subjects at the subsequent annual examination of the Board as per syllabi and courses laid down for the examination concerned in order to pass the examination. The candidates' practical marks/external assessment marks obtained in the main examinations will be carried over till the fifth chance compartmental examination. Rule 42(ii)

(iii) Syllabi and Courses for the compartmental candidates in March Examination shall be the same as applicable to the candidates of full subjects appearing at the examination.

(iv) A candidate placed in Compartment shall be eligible to appear at the first at the main examination held in March/April (to be held the same year)/third (to be held the next year) /fifth (to be held the year after) chances compartment examination to be held in July/August only in those subjects in which he/she has been placed in compartment. Rule 42(iv)

(v) For subjects involving practical work, in case the candidate has passed in practical at the main: examination he/she shall appear only in theory part and previous practical marks will be carried forward and accounted for. In case a candidate has failed in practical he/she shall have to appear in theory and practical both irrespective of the fact that he/she has already cleared the theory examination.

(vi) A candidate who is placed in Compartment in the Secondary School Examination (Class-X) shall be admitted provisionally to class XI till he takes in first chance Compartmental Examination to be held in July/August of that year. His/her admission shall be treated as cancelled if he/she fails to pass at the first chance Compartmental Examination.

2.8. Retention of Practical Marks in Respect of Failure candidates for Senior Schol Certificate Examination

A candidate who has failed in the examination in the first attempt shall be required to re-appear in all the subjects at the subsequent annual examination of the Board. He/she shall appear only in theory part and his/her previous practical marks will be carried forward and accounted for if he/she has passed in practical. In case a candidate has failed in practical he/she shall have to appear in theory and practical both. If he/she fails to pass the examination in three consecutive years, after the first attempt he/she shall have to reappear in all the subjects including practical.

2.9 Additional Subject(s)

(i) A candidate who has passed the Senior School Certificate Examination of the Board may offer an additional subject as a private candidate provided the additional subject is provided in the Scheme of Studies and is offered within SIX YEARS of passing the examination of the Board. No exemption from time limit will be given after six years. Facility to appear in additional subject will be available at the annual examination only.

(ii) However, candidates appearing in six subjects at the Senior School Certificate Examination having been declared "Pass" by virtue of securing pass marks in five subjects as per Rule 40.1(iv) may appear in the failing subject at the Compartment Examination to be held in July/August the same year.

2.10 Improvement of performance - Senior School Certificate Examination

(i) A candidate who has passed an examination of the Board may reappear for improvement of performance in the succeeding year only; however, a candidate who has passed an examination of the Board under Vocational Scheme may reappear for improvement of performance in the main examination in the succeeding year or the following year provided they have not pursued higher studies in the mean time. They will appear as private candidates. Those reappearing for the whole examination may, however, appear as regular candidates also if admitted by the school as regular students. The candidate (s) appearing for improvement of performance can appear in the subject (s) only in which they have been declared pass and not in the subject in which they have been declared fail.

(ii) For subjects involving practical work, in case the candidate has passed in practical at the main examination, he/she shall be allowed to appear in theory part only and marks in practical obtained at the main examination shall be carried forward and accounted for. In case a candidate has failed in practical, he/she shall have to appear in theory and practical both irrespective of the fact that he/she has already cleared the theory examination.

(iii) Candidates who appear for improvement of performance will be issued only Statement of Marks reflecting the marks of the improvement examination.

(iv) A candidate appearing for Improvement of Performance in one or more subjects can not appear for additional subject simultaneously.

2.11 Examination Bye-Laws

Rest of conditions for appearing in the examination shall be as laid down in the Examination bye laws of the Board from time to time.

3. SCHEME OF STUDIES

3.1 Academic Stream

The learning areas will include:

I&II Two Languages (Core/Elective) out of

Hindi, English, Assamese, Bengali, Gujrati, Kashmiri, Kannada, Marathi, Malyalam, Manipuri, Oriya, Punjabi, Sindhi, Tamil, Telugu, Urdu, Sanskrit, Arabic, Persian, Limboo, Lepcha, Bhutia, Mizo, Nepali, Tibetan, French, German, Portuguese, Russian and Spanish.

Notes:

I. Out of the languages, one shall be English or Hindi, both English and Hindi can also be offered simultaneously.

2. The languages may be offered either at Core/Elective level. The same language, however cannot be' offered both at the Core level and Elective level.

3. A candidate has the freedom to offer, in lieu of one of the two languages above, any other elective subject provided under III below.

Note: English can be offered at any of the three levels given below:

1. English Core
2. English Elective
3. Functional English

III to V. Three Elective out of the following:

Mathematics, Physics, Chemistry, Biology, Biotechnology, Engineering Drawing, Economics, Political Science, History, Geography, Business Studies, Accountancy, Home Science, Fine Arts, Agriculture, Computer Science/Informatics Practices, Multimedia and Web Technology, Sociology, Psychology, Philosophy, Physical Education, Music and Dance, Entrepreneurship, Fashion Studies, Environmental Education. (In this regard please also refer to notes under 3.2.1. and 3.2.2 below).

Note: 1. The candidate shall opt either for Computer Science or Informatics Practices. However along with either of this, they can opt for Multimedia and Web technology. Thus, a Candidate can opt for maximum of two IT based Courses.

VI. General Studies

VII. Work Experience

VIII. Physical and Health Education

Additional Subject:

A candidate can also offer an additional elective which may either be a language at elective level (out of those mentioned above) or, any other elective subject. In this respect please also refer to clause 2.5 (iv) under chapter 2.

While transacting the Curriculum due emphasis should be laid on National Identity and Value Education. Schools are expected to draw their own programmes in this area in

accordance with the guidelines contained in the brochure 'National Integration through Schools' published by the Board, Likewise, programmes in General Studies, Work Experience and Physical and Health Education be planned in accordance with the guidelines brought out by the Board. For details please refer to the Part-IV of this curriculum.

3.2 Vocational Stream

3.2.1 Bridges between Vocational and Academic Streams

Bridges between Commerce-based vocational courses/packages and the subjects pertaining to different disciplines under the Academic Stream have also been provided. Accordingly, Business Studies, Accountancy and other subjects can be combined, subject to meeting the obligations required under the prescribed scheme of studies, with the following areas from the commerce based Vocational Courses:

1. Typewriting in English (code no. 607)
2. Stenography in English (code no. 608)
3. Typewriting in Hindi (code no. 609)
4. Stenography in Hindi (code no. 610)
5. Marketing (code no. 613)
6. Consumer Behaviour and Protection (code no. 615)
7. Storekeeping (code no. 617)
8. Store Accounting (code no. 618)

3.2.2 These electives can be offered along with Business Studies, Accountancy and other subject to the following stipulations:

(i) Not more than two electives from the above list be offered.

(ii) These papers be not combined with the electives related to similar disciplines under the academic stream in order to avoid duplication e.g. Store Accounting (code no. 618) can not be combined with Accountancy (code no. 055)

(iii) If Stenography in Hindi or English is offered, it is obligatory to offer Hindi Typewriting or English Typewriting respectively as the case may be to make the combinations more meaningful. English Stenography, however, cannot be combined with Hindi Typewriting or corollarily Hindi Stenography with English Typewriting.

3.3 Instructional Time:

Per Week of Teaching Time

Subject	*Suggestive Periods*
Language I	7
Language II	7
Elective I	8

Elective II	or Vocational Course	8
Elective III		8
General Studies/General Foundation Course (GFC)		3
Work Experience (Not applicable to Vocational Stream)		2+2*
Physical & Health Education		2

* Time expected to spend outside school hours

While designing the courses it has been presumed that, given margin to vacations, public holidays and other contingencies, a minimum of 30 weeks of teaching time will be available in each session for actual instructional transaction. Accordingly, the distribution of periods over units and sub-units has been made which is only suggestive in character. The schools, keeping the overall number of periods in each subject area the same may assign more or less number of periods to individual units according to their relative importance if throughout necessary. The distribution of marks over each unit (unitwise weightage) is perspective, hence shall remain unchanged.

Notes: 1. Schools are expected to give adequate time for Community Service outside the school hours, the minimum being equivalent of two periods a week.

2. The Vocational Group candidates should make use of the time allotted for Work Experience for on the job training, if so required.

3.4 Medium of Instruction

The medium of instruction in general in all the schools affiliated with the board shall either be English or Hindi.

3.5 Special Adult Literacy Drive (SALD)

In pursuance of the objects of the National Literacy Mission, Government of India, a Special Adult Literacy Programme has been taken up by Board from the academic session 1991-92 beginning with classes IX & XI as a special measure to help remove illiteracy, through massive involvement of students. This has been termed as SALD. The Adult Literacy Drive has been made an essential component of Work Experience. Framework of SALD is given at Appendix 'A'. Since this activity has to be taken up by all the schools on a compulsory basis, their attention is invited, among other things, to clauses 2 and 3 of the Framework.

PART II
COURSES OF STUDIES

1. English (Elective)
Code No: 001
Classes XI-XII

Background

The course is intended to give students a high level of competence in English with an emphasis on the study of literary texts and will provide extensive exposure to a variety of rich texts of world literature as well as to Indian writings in English, including classics, and develop sensitivity to the creative and imaginative uses of English and give them a taste for reading with delight and discernment. The course will be pitched at a level which the students may find challenging.

The course is primarily designed to equip the students to pursue higher studies in English literature and English language at the college level and prepare students to become teachers of English.

Objectives

The general objectives at this stage are:

- to provide extensive exposure to a variety of writings in English including some classics
- to develop sensitivity to the literary and creative uses of language
- to further expand the learners' vocabulary resources through the use of dictionary, thesaurus and encyclopaedia
- to develop a taste for reading with discernment and delight
- to initiate the study of formal English grammar and elementary linguistics and phonetics
- to enable learners to translate texts from mother tongue into English and vice versa
- to critically examine a text and comment on different aspects of it

At the end of this stage the Elective Course would ensure that the learner

- grasps the global meaning of the text, its gist and understands how its theme and sub-theme relate,
- relates the details to the message in it; for example, how the details support a generalization or the conclusion either by classification or by contrast and comparison,
- comprehends details, locates and identifies facts, arguments, logical relationships, generalization, conclusions, etc.,
- draws inferences, supplies missing details, predicts outcomes, grasps the significance of particular details and interprets what he/she reads.
- assesses the attitude and bias of the author,
- infers the meanings of words and phrases from the context; differentiates between apparent synonyms and appreciates the nuances of words,
- appreciates stylistic nuances, the lexical structure, its literal and figurative use and analyses a variety of texts,
- identifies different styles of writing like humorous, satirical, contemplative, ironical

and burlesque,

- does text-based writing (writing in response to questions or tasks based on prescribed as well as 'unseen' texts),
- develops the advanced skills of reasoning, making inferences, judgements, etc.,
- develops familiarity with the poetic uses of language including features of language through which artistic effect is achieved.
- to develop sensitivity to the literary and creative uses of language
- to further expand the learners' vocabulary resources through the use of dictionary, thesaurus and encyclopaedia
- to develop a taste for reading with discernment and delight
- to initiate the study of formal English grammar and elementary linguistics and phonetics
- to enable learners to translate texts from mother tongue into English and vice versa
- to critically examine a text and comment on different aspects of it

At the end of this stage the Elective Course would ensure that the learner

- grasps the global meaning of the text, its gist and understands how its theme and sub-theme relate,
- relates the details to the message in it; for example, how the details support a generalization or the conclusion either by classification or by contrast and comparison,
- comprehends details, locates and identifies facts, arguments, logical relationships, generalizations, conclusions, etc.,
- draws inferences, supplies missing details, predicts outcomes, grasps the significance of particular details and interprets what he/she reads.
- assesses the attitude and bias of the author,
- infers the meanings of words and phrases from the context; differentiates between apparent synonyms and appreciates the nuances of words,
- appreciates stylistic nuances, the lexical structure, its literal and figurative use and analyses a variety of texts,
- identifies different styles of writing like humorous, satirical, contemplative, ironical and burlesque.
- does text-based writing (writing in response to questions or tasks based on prescribed as well as 'unseen' texts),
- develops the advanced skills of reasoning, making inferences, judgements, etc.,
- develops familiarity with the poetic uses of language including features of language through which artistic effect is achieved.

Grammar

Students opting for the Elective Course will be introduced to the study of the basics of English grammar and phonology. It is recommended that a textbook based on a suitable pedagogical model that presents the basics of functional grammar and the bare essentials of the phonology of English be used.

The basic concepts in the phonology of English will include the sounds of English, the syllable stress, strong and weak forms and intonation. The course will help the students consult a pronouncing dictionary when required.

Methods and Techniques

The techniques used for teaching should promote habits of self-learning and reduce dependence on the teacher. The multi-skill, learner-centred, activity based approach already recommended for the previous stages of education, is still in place, though it will be used in such a way that silent reading of prescribed/selected texts for comprehension will receive greater focus as one of the activities. Learners will be trained to read independently and intelligently, interacting actively with texts and other reference materials (dictionary, thesaurus, encyclopaedia, etc.) where necessary. Some pre- reading activity will generally be required, and course books should suggest those. The reading of texts should be followed by post reading activities. It is important to remember that every text can generate different readings. Students should be encouraged to interpret texts in different ways, present their views of critics on a literary text and express their own reactions to them. Some projects may be assigned to students from time to time. For instance, students may be asked to put together a few literary pieces on a given theme from English as well as regional literatures.

		Marks	Periods
1.	**Reading an unseen passage and a poem**	**20**	**35**

Class XI

One Paper 3 Hours Marks 100

Unitwise Weightage

	Unit	Marks
1.	Reading an unseen passage and poem	20
2.	Writing	20
3.	Seminar	10
4.	Text for detailed study	30
5.	Drama	10
6.	Fiction	10

(a) Literary or discursive passage of about 500-600 words 12

(b) A poem of about 15 lines 08

2. Writing 20 35

(a) To write an essay on an argumentative/discursive/reflective/or descriptive topic (150 words) 10

(b) To write a composition such as an article, report, a speech (150 words) 10

3. Seminar

- Presentation of a review of a book, play, short story, novel, novella followed by a question answer session **25**
- Poetry reading followed by interpretive tasks based on close reading and literary analysis of the text.
- Critical review of a film, a play or conducting a theatre workshop.

Note: The above will focus on presentation skills, analytical skills, spoken skills and literary criticism.

4. Text for detailed study 30 75

Prose 20

(a) Two passages for comprehension with short answer questions testing deeper interpretation and inference drawing (04 × 2) 08

(b) One out of two questions to be answered in about 100 words each testing global comprehension 06

(c) Two short answer questions testing comprehension to be answered in a paragraph of about 30-40 words each 06

Poetry 10

(a) One extract from the prescribed poems for literary interpretation, comprehension 04

(b) One out of two questions on the prescribed poems for appreciation to be answered in 100 words 06

5. Drama - Arms and the Man 10 20

(a) One out of two questions to be answered in about 150-200 words to test the evaluation of characters, events and episodes.

6. Fiction 10 20

(a) One question to be answered in about 150 words testing the appreciation of characters, events, episodes and interpersonal relationship. 06

(b) Two out of three short answer type questions to be answered in about 30-40 words on content, events and episodes. (2×2) 04

Books prescribed

1. **Text book: Woven words** published by NCERT
2. **Fiction:** Novel (unabridged) The Old Man and The Sea – E. Hemingway
3. **Drama:** Arms and the Man – Bernard Shaw

Marks Periods

1. Reading an unseen passage and poem 20 35

(a) One literary or discursive passage of about 500-600 words

Class XII

One Paper 3 Hours Marks: 100

Unitwise Weightage

	Units	Marks
1.	Reading an unseen passage and poem	20
2.	Writing	20
3.	Applied Grammar	10
4.	Texts for detailed study	40
5.	Fiction	10

followed by short questions 12

(b) A poem of about 15 lines followed by short questions to test interpretation and appreciation 8

2. Writing 20 30

(a) One essay on argumentative/discursive topic (150-200 words) 10

(b) To write a composition such as an article, report, speech

		(150-200 words)	10	
3.	**Applied Grammar**		**10**	**10**
	(a)	Editing and error correction of words and sentences	05	
	(b)	Changing the narration of a given input	05	
4.	**Texts for detailed study**		**40**	**100**
	(a)	Two passages or extracts followed by short answer type questions for comprehension, interpretation, drawing inferences (4× 2)	08	
	(b)	Two out of three questions to be answered in 100 words each testing global comprehension (6+6)	12	
	(c)	Five out of six questions to be answered in about 60 words each testing comprehension, characterisation, interpretation (3+3)	4 x 5 = 20	
5.	**Fiction**		**10**	**30**
	(a)	One out of two questions to be answered in about 60 words each seeking comments, interpretation	04	
	(b)	One question in about 100 words to test evaluation and appreciation of characters, events, episodes and interpersonal relationships	06	

Books prescribed

1. ***Woven Words - Text book published by NCERT***
2. ***Fiction- Novel: Tiger for Malgudi by R.K. Narayan***

   or

   The Financial Expert by R. K. Narayan

2. Functional English
Code No. 101

Aims and Objectives of the Functional English Course

- to enable the learner to acquire competence in different linguistic functions
- to reinforce the various subskills acquired related to reading, writing, listening and speaking.
- to broaden the language base to enable the learner to use language effectively.

The Approach to Functional English Curriculum

- A skill based communicative approach is recommended in Functional English with graded texts followed by learner centred activities.
- It is recommended that teachers consciously take a back seat, playing the role of a manager, coordinator and facilitator.

Acquisition of Language Skills and their Objectives

Approach to Reading

- Variety in text type rather than having only short stories and prose pieces.
- Inbuilt activities with enough guidance to the teacher and learners towards acquisition of reading skills.
- Development of vocabulary through word building skills.
- Reading for specific purposes.
- Ten core objectives of the National Policy kept in mind while looking for reading inputs and working on the materials.

Specific Objectives of Reading

to develop specific study skills such as

- to refer to dictionaries, encyclopedia, thesaurus and academic reference material
- to select and extract relevant information, using reading skills of skimming and scanning,
- to understand the writer's attitude and bias.
- to comprehend the difference between what is said and what is implied.
- to understand the language of propaganda and persuasion.
- to develop the ability to differentiate between claims and realities, facts and opinions.
- to develop the ability to form business opinions on the basis of latest trends available.
- to develop the ability to comprehend technical language as required in computer related fields.

- to arrive at personal conclusion and comment on a given text specifically
    - to develop the ability to be original and creative in interpreting opinion
    - to develop the ability to be logically persuasive in defending one's opinion.
- to develop literary skills as enumerated below
    - to personally respond to literary texts
    - to appreciate and analyze special features of languages that differentiate literary texts from non-literary ones
    - to explore and evaluate features of character, plot, setting etc.
    - to understand and appreciate the oral, mobile and visual elements of drama
    - to identify the elements of style such as humour, pathos, satire and irony etc.

Speaking and Listening

- Skills overtly built into the materials (Language Skillsbook)
- Teachers need special guidance in the actualization of the skills.
- Speaking needs a very strong emphasis and is an important objective leading to professional competence.
- Testing of oral skills to be made an important component of the overall testing pattern.

Specific Objectives of Listening and Speaking or Conversation Skills (Aural/Oral)

- to listen to lectures and talks and to be able to extract relevant and useful information for a specific purpose.
- to listen to news bulletins and develop the ability to discuss informally on wide ranging issues like current national and international affairs, sports, business etc.
- to respond in interviews and participate in formal group discussions.
- to make enquiries meaningfully and adequately respond to enquiries for the purpose of travelling within the country and even abroad.
- to listen to business news and be able to extract relevant important information.
- to develop the art of formal public speaking.

Writing Skills

The following were kept in mind while framing the Language Skillsbook

- Teaching skills and subskills of writing focused on the process of writing.
- Writing skills integrated with the other skills and not compartmentalized.
- Subskills of writing to be taught in a context.

- Course for two years graded in such a way that it leads the students towards acquiring advanced writing skills.
- Writing tasks move from less linguistically challenging to more linguistically challenging ones.

Specific Objectives of Writing

- to write letters to friends, pen friends, relatives etc.
- to write business letters and official ones.
- to send telegrams, faxes, e-mails.
- to open accounts in post offices and banks.
- to fill in railway reservation slips.
- to write on various issues to institutions seeking relevant information, lodge complaints, express thanks or tender apology.
- to write applications, fill in application forms, prepare a personal bio-data for admission into colleges, universities, entrance tests and jobs.
- to write informal reports as part of personal letters on functions, programmes and activities held in school (morning assembly, annual day, sports day etc.)
- to write formal reports for school magazines or in local newspapers on the above events or occasions.
- to write presentation of opinions, facts, arguments in the form of set speeches for debates.
- to present papers for taking part in symposia.
- to take down notes from talks and lectures and make notes from various resources for the purpose of developing the extracted ideas into sustained pieces of writing.
- to write examination answers according to the requirement of the various subjects.

CLASS XI

One Paper **3 Hours** **Marks: 100**

Unitwise Weightage

Unit	Area of Learning	Marks
1.	Advanced Reading Skills (Unseen passages two)	20
2.	Effective Writing Skills	25
3.	Applied Grammar	15
4.	Literature	30
5.	Conversation Skills (Listening + Speaking) (5+5)	10

SECTION A

1. ADVANCED READING SKILLS **20 Marks** **50 Periods**

Two unseen passages (including poems) with a variety of questions including 04 marks for vocabulary such as word formation and inferring meaning. The total range of the 2 passages, including a poem or a stanza, should be around 850- 1100 words.

1) 350-500 words in length - 8 marks (for note-making and summarizing) 08

2) 500-600 words in length - 12 marks (04 marks for vocabulary)

The passages or poems could be any one of the following types 12

(a) Factual passages e.g. instructions, descriptions, reports

(b) Discursive passages involving opinion e.g. argumentative, persuasive

(c) Literary passages e.g. poems, extracts from fiction, biography, autobiography, travelogue etc.

In the case of a poem, the text may be shorter than 200 words.

SECTION B

2. EFFECTIVE WRITING SKILLS **25 Marks** **50 Periods**

3. THREE writing tasks as indicated below :

One out of two short writing tasks such as composing messages, notices, e-mails and factual description of people (50-80 words) 05

Note: e-mail is to be tested only as part of continuous assessment

4. Writing one out of two letters based on given verbal/visual input 10

a) Letter types include official letters for making inquiries, registering complaints, asking and giving information, placing orders and sending replies (80-100 words)

b) Letters to the editors on various social issues (125-150 words) 10

5. One out of two long and sustained writing task such as writing a speech, an article based on verbal/visual input (150-200 words).

SECTION C

APPLIED GRAMMAR **15 Marks 30 Periods**

Variety of questions, as listed below, may be asked to test grammar items in context (i.e. not in isolated sentences). Grammar items such as modals, determiners, voice and tense forms are being dealt with in Class XI. However, other items such as prepositions, verb forms, connectors which have been learnt earlier would also be included.

6.	Drafting questions/questionnaires based on given input	4
7.	Composing a dialogue based on the given input	4
8.	Testing Pronunciation, Stress and Intonation	3
9.	Error correction in sentences	4

SECTION D

LITERATURE **30 Marks 50 Periods**

In the Literature Reader, questions will be asked to test comprehension at different levels and of different kinds: local, global, interpretative, inferential, evaluative and extrapolatory.

10.	One out of two extracts from different poems from the Literature Reader, each followed by two or three questions to test local and global comprehension of the text.	4
11.	Two out of three short answer questions based on different poems to test theme, setting and literary devices. It may or may not be based on the extract.	6
12.	One out of two questions on the play from the *Literature Reader to* test global comprehension. An extract may or may not be used (80-100 words)	5
13.	Two out of three short answer questions based on different prose texts from the *Literature Reader* to test global comprehension (50 words)	8
14.	One out of two extended questions based on one of the prose texts in the *Literature Reader* to test global comprehension and extrapolation beyond the text (100-125 words)	7

Prescribed Books

1. *Language Skillsbook - Functional English* published by Central Board of Secondary Education, Delhi.
2. *Literature Reader - Functional English* published by Central Board of Secondary Education. Delhi.

Conversation Skills **10 Marks 30 Periods**
(Listening and Speaking)

Conversation Skills will be tested both as part of Continuous Assessment and at the final examination. Out of the 10 marks allotted for Conversation 05 marks may be used for testing listening and 05 marks may be used for testing speaking. The Conversation Skills Assessment Scale may be used for evaluating.

Listening

The examiner will read aloud a passage based on a relevant theme or a short story. The passage may be factual or discursive. The length of the passage should be around 350 words. The examinees are expected to complete the listening comprehension tasks given in a separate sheet while listening to the teacher. The tasks set may be gap-filling, multiple choice, True or False or short answer questions. There may be ten different questions for half a mark each.

Speaking

Narration based on a sequence of pictures. In this section the candidate will be required to use the language of narration.

Description of a picture (can be pictures of people or places)

Speaking on a given topic to test recall of a personal experience

NOTE: .

- At the start of the examination the examiner will give the candidate some time to prepare for the task.
- Students be asked to relate something from their personal experience such as a funny happening, the theme of a book, story of a movie seen recently.
- Once the candidate has started speaking, the examiner should intervene as little as possible

Conversation Skills Assessment Scale

Listening	**Speaking**
The learner:	The learner:
1. has general ability to understand words and phrases in a familiar context but cannot follow connected speech;	1. shows ability to use only isolated words and phrases but cannot operate on connected speech level;
3. has ability to follow short connected utterances in a familiar context;	3. in familiar situations, uses only short connected utterances with limited accuracy:
5. has ability to understand explicitly stated information in both familiar and unfamiliar contexts;	5. shows ability to use more complex utterances with some fluency in longer discourse; still makes some errors which impede communication:
7. understands a range of longer spoken texts with reasonable accuracy, and is able to draw inferences:	7. organizes and presents thoughts in a reasonably logical and fluent manner in unfamiliar situations; makes errors which do not interfere with communication.
9 shows ability to interpret complex discourse in terms of points of view; adapts listening strategies to suit purposes.	9. can spontaneously adapt style appropriate to purpose and audience; makes only negligible errors.

Examination Specifications

Class XII

One Paper **3 Hours** **Marks : 100**

Unitwise Allocation

Unit	Areas of Learning	Marks
1.	Advanced Reading Skills (Unseen Passages-two)*	20
2.	Effective Writing Skills	25
3.	Applied Grammar	20
4.	Literature	35

SECTION A

1. ADVANCED READING SKILLS **20 Marks** **60 Periods**

Two unseen passages (including poems) with a variety of questions including 04 marks for vocabulary such as word formation and inferring meaning. The total range of the 2 passages including a poem or a stanza, should be around 850- 1100 words.

1. 350-500 words in length (for note-making and summarising) 08
2. 500-600 words in length (4 marks for word attack skills) 12

The passages or poems could be any one of the following types

Factual passages e.g. illustrations, description, reports

Discursive passages involving opinion e.g. argumentative, persuasive

Literary passages e.g. poems, extracts from fiction, biography, autobiography, travelogue etc.

In the case of a poem, the text may be shorter than the prescribed word limit.

SECTION B

2. EFFECTIVE WRITING SKILLS **25 Marks** **60 Periods**

3. One out of two short writing tasks such as notices, advertisements, factual description of people, places and objects, drafting posters, accepting and declining invitations. (50-80 words) 5

4. Writing one out of two letters of any of the following types based on given verbal/visual input 10

   a) Letter types including official letters for making inquiries, registering complaints asking and giving information, placing orders and sending replies (80-100 words)

   b) Letters to the editors on various social issues (125-150 words)

   c) Application for a job including CV (Curriculum Vitae)/Resume

5. One out of two long and sustained writing task such as writing a speech, a report or an article based on verbal/visual input (200 words) 10

SECTION C

APPLIED GRAMMAR **20 Marks 30 Periods**

Variety of questions, as listed below may be asked, involving the application of grammar items in context (i.e. not in isolated sentences). The grammar syllabus will be sampled each year. Grammar items such as modals, determiners, voice and tense forms have been dealt with in class XI. However, other items such as prepositions, verb forms, connectors which have been learnt earlier would also be included.

6. Reordering of words and sentences 5
7. Composing a dialogue based on the given input 5
8. Error correction in sentences 5
9. Drafting questions/questionnaires based on given input 5

SECTION D

LITERATURE **35 Marks 30 Periods**

In the *Literature Reader,* questions will be asked to test comprehension at different levels and of different kinds local, global, interpretative, inferential, evaluative and extrapolatory.

10. One out of two extracts from different poems from the *Literature Reader,* each followed by two or three questions to test local and global comprehension of the text. 7
11. Two out of the three short answer questions based on different poems to test theme, setting and literary devices. It may or may not be based on an extract. 8
12. One out of two questions based on the play from the *Literature Reader* to test comprehension and drawing/evaluating inferences. An extract may or may not be used (80-100 words) 5
13. Two out of three short questions based on different prose texts from the *Literature Reader* to test global comprehension (50 words) 8
14. One out of two extended questions based on one of the prose texts in the *Literature Reader* to test global comprehension and extrapolation beyond the text (100-125 words) 7

Prescribed Books :

1. ***Language Skillsbook- Functional English*** published by Central Board of Secondary Education, Delhi.
2. ***Literature Reader - Functional English*** published by Central Board of Secondary Education, Delhi.

3. English (Core)
Code No: 301

Background

Students are expected to have acquired a reasonable degree of language proficiency in English by the time they come to class XI, and the course will aim, essentially, at promoting the higher-order language skills.

For a large number of students, the higher secondary stage will be a preparation for the university, where a fairly high degree of proficiency in English may be required. But for another large group, the higher secondary stage may be a preparation for entry into the world of work. The Core Course should cater to both groups by promoting the language skills required for academic study as well as the language skills required for the workplace.

Objectives

The general objectives at this stage are:

- to listen to and comprehend live as well as recorded oral presentations on a variety of topics,
- to develop greater confidence and proficiency in the use of language skills necessary for social and academic purposes.
- to participate in group discussions/interviews, making short oral presentations on given topics.
- to perceive the overall meaning and organisation of the text (i.e., the relationships of the different "chunks" in the text to each other).
- to identify the central/main point and supporting details, etc.
- to build communicative competence in various registers of English.
- to promote advanced language skills with an aim to develop the skills of reasoning, drawing inferences, etc. through meaningful activities.
- to translate texts from mother tongue (s) into english and vice versa.
- to develop ability and knowledge required in order to engage in independent ~ reflection and enquiry.
- to develop the capacity to appreciate literary use of English and also use English creatively and imaginatively.

At the end of this stage learners will be able to do the following:

- read and comprehend extended texts (prescribed and non-prescribed) in the following genres: fiction, science fiction, drama, poetry, biography, autobiography, travel and sports literature, etc.
- text-based writing (i.e., writing in response to questions or tasks based on prescribed or unseen texts)
- understand and respond to lectures, speeches, etc.

- write expository/argumentative essays of 250-500 words, explaining or developing a topic, arguing a case, etc.
- write formal/informal letters and applications for different purposes.
- write items related to the workplace (minutes, memoranda, notices, summaries reports; filling up of forms, preparing CVs, e-mail messages, etc.).
- taking/making notes from reference materials, recorded talks etc.

Language Items

The Core Course should draw upon the language items suggested for classes IX-X and delve deeper into their usage and functions. Particular attention may, however, be given to the following areas of grammar:

- the uses of different tense forms for different kinds of narration (e.g. media commentaries, reports, programmes, etc.).
- the use of passive forms in scientific and innovative writings
- converting one kind of sentence/clause into a different kind of structure as well as other items to exemplify stylistic variations in different discourses
- modal auxiliaries - uses based on semantic considerations.

The study of formal (descriptive) grammar, at a very elementary level, will be introduced in Class XI. The Workbook for the Core Course will contain suitable exercises on grammar as well as basic phonology. A conscious knowledge of some grammatical rules and sound patterns may be useful and interesting at this stage.

Methods and Techniques

The techniques used for teaching should promote habits of self-learning and reduce dependence on the teacher. In general, we recommend a multi-skill, learner-centred, activity based approach, of which there can be many variations. The core classroom activity is likely to be that of silent reading of prescribed/selected texts for comprehension, which can lead to other forms of language learning activities such as role play, dramatization, group discussion, writing, etc. although many such activities could be carried out without the preliminary use of textual material. It is important that students be trained to read independently and intelligently, interacting actively with texts, with the use of reference materials (dictionaries, thesauruses, etc.) where necessary. Some pre-reading activity will generally be required, and the course books should suggest suitable activities, leaving teachers free to devise other activities when desired. So also, the reading of texts should be followed by post reading activities. It is important to remember that every text can generate different readings. Students should be encouraged to interpret texts in different ways.

Group and pair activities can be resorted to when desired, but many useful language activities can be carried out individually.

In general, teachers should encourage students to interact actively with texts and with each other. Oral activity (group discussion, etc.) should be encouraged.

EXAMINATION SPECIFICATIONS
Class XI (ENGLISH CORE)

One paper **3 Hours** **Marks: 100**

Unitwise Weightage

	Unit/Areas of Learning		Marks
A.	**Reading Unseen Passages (Two)**	20	
B.	**Writing**	20	50
C.	**Grammar**	10	
D.	**Textual Questions**		
	(i) Textbook	30	40
	(ii) Supplementary Reader	10	
E.	**Conversation Skills**		
	(i) Listening	05	10
	(ii) Speaking	05	

SECTION - A

Reading unseen Passages for Comprehension and Note-making 20 Marks 40 Periods

Two unseen passages with a variety of questions including 5 marks for vocabulary such as words formation and inferring meaning. The total length of both the passages together should be around 1100 words.

1. The passages could be any of the following two types:
2. (a) Factual passages e.g. instructions, descriptions, reports.
   (b) Discursive passages involving opinion e.g. argumentative, persuasive.

SUMMARY - Class XI

	Unseen Passages	No of words	Testing Areas	Marks allotted
1.	12 marks	around 600	Short answer type questions to test local, global and inferential comprehension	10
			Vocabulary	02
2.	08 marks	around 500	Note-making in an appropriate format	05
			Vocabulary	03

One of the passages should have about 600 words carrying 12 marks, the other passage should have about 500 words carrying 8 marks.

The passage carrying 08 marks should be used for testing note-making for 5 marks and testing vocabulary for 3 marks. Vocabulary for 2 marks may be tested in the other passage carrying 12 marks.

SECTION B

WRITING **20 Marks** **40 periods**

3.	One out of two tasks such as a factual description of any event or incident, a report or a process based on verbal input provided (80-100 words).	04
4.	One out of two compositions based on a visual and/or verbal input (in about 100-150 words). The output may be descriptive or argumentative in nature such as an article for publication in a newspaper or a school magazine or a speech.	08
5.	Writing one out of two letters based on given input. Letter types include (a) business or official letters (for making enquiries, registering complaints, asking for and giving information, placing orders and sending replies); (b) letters to the editors (giving suggestions, opinions on an issue of public interest) or (c) application for a job.	08

SECTION C

GRAMMAR **10 Marks** **30 Periods**

Different grammatical structures in meaningful contexts will be tested. Item types will include gap-filling, sentence-reordering, dialogue-completion and sentence-transformation. The grammar syllabus will include the following areas:

6.	Determiners, Tenses, Clauses, Modals and Error Correction	4
7.	Editing Task	4
8.	Reordering of sentences	2

SECTION D

TEXTUAL QUESTIONS **40 Marks** **100 Periods**

Questions on the prescribed textbooks will test comprehension at different levels: literal, inferential and evaluative based on the following prescribed text books:

1. ***Hornbill :*** *Text book,* published by NCERT, New Delhi.
2. ***Snapshots :*** *Supplementary Reader,* published by NCERT, New Delhi.

English Reader **30 Marks**

9.	One out of two extracts based on poetry from the text to test comprehension and appreciation.	4
10.	Two out of three short answer questions from the poetry section to test local and global comprehension of text (upto 30 words).	6

11.	Five out of six short answer questions on the lessons from prescribed text (upto 30 words)	2x5=10
12.	One out of two long answer type questions based on the text to test global comprehension and extrapolation beyond the set text. (Expected word limit would be about 100-125 words each)	10

Supplementary Reader **10 Marks**

13.	One out of two long answer type questions based on Supplementary Reader to test comprehension of theme, character and incidents. (upto 100 words)	4
14.	Two out of three short answer questions from the Supplementary Reader (upto 30 words)	3+3 = 6

Prescribed Books

1. ***Hornbill - Text book published by NCERT, New Delhi.***
2. ***Snapshots - Supplementary Reader published by NCERT, New Delhi.***

Conversation Skills (Listening + Speaking)

Conversation Skills will be tested both as part of Continuous Assessment and at the final examination. Out of the 10 marks allotted for Conversation, 05 marks may be used for testing Listening and 05 marks may be used for testing Speaking. The Conversation Skills Assessment Scale may be used for evaluating.

Listening

The examiner will read aloud a passage based on a relevant theme or a short story. The passage may be *factual or discursive.* The length of the passage should be around 350 words. The examinees are expected to complete the listening comprehension tasks given in a separate sheet while listening to the teacher. The tasks set may be gap-filling, multiple choice, true or false or short answer questions. There may be ten different questions for half a mark each.

Speaking

Narration based on a sequence of pictures. In this section the candidate will be required to use narrative language.

Description of a picture (can be pictures of people or places)

Speaking on a given topic to test recall of a personal experience.

NOTE:

- At the start of the examination the examiner will give the candidate some time to prepare. In case of narration the present tense should be used.
- Topics chosen should be within the personal experience of the examinee such as: relating a funny anecdote, retelling the theme of a book read or a movie seen recently.
- Once the candidate has started, the examiner should intervene as little as possible.

Conversation Skills Assessment Scale

Listening

The learner:

1. has general ability to understand words and phrases in a familiar context but cannot follow connected speech;
3. has ability to follow short connected utterances in a familiar context;
5. has ability to understand explicitly stated information in both familiar and unfamiliar contexts;
7. understands a range of longer spoken texts with reasonable accuracy and is able to draw inferences;
9. shows ability to interpret complex discourse in terms of points of view; adapts listening strategies to suit purposes.

Speaking

The learner:

1. shows ability to use only isolated words and phrases but cannot operate on connected speech level;
3. in familiar situations, uses only short connected utterances with limited accuracy;
5. shows ability to use more complex utterances with some fluency in longer discourse; still makes some errors which impede communication;
7. organizes and presents thoughts in a reasonably logical and fluent manner in unfamiliar situations; makes errors which do not interfere with communication.
9. can spontaneously adapt style appropriate to purpose and audience; makes only negligible errors.

CLASS XII

One Paper **3 Hours** **Marks: 100**

Unitwise Weightage

	Unit/Areas of Learning	Marks
	Section A	
A.	**Reading Skills** Reading unseen prose passages and note making	20
	Section B	
B.	**Advanced Writing Skills**	35
C.	**Section C (Prescribed Books)**	
	(i) English Reader	30
	(ii) Supplementary Reader	15

SECTION-A

Reading unseen Passages and Note-making **20 Marks** **40 Periods**

Two unseen passages with a variety of questions including 03 marks for vocabulary such as word formation and inferring meaning and 05 marks for note-making.

The total length of the two passages will be between 950-1200 words. The passages will include two of the following:

(a) **Factual Passages** e.g. instructions, descriptions, reports.

(b) **Discursive passage** involving opinion e.g. argumentative, persuasive or interpretative text.

(c) **Literary passage** e.g. extract from fiction, drama, poetry, essay or biography

Summary - Class XII

Unseen passages	No. of words	Testing Areas	Marks Allotted	
1.	600-700	Short answer type questions to test local, global and inferential comprehension, Vocabulary	09 03	12
2.	350-500	Note-making in an appropriate format	05	08
		Abstraction	03	

A passage of about 600-700 words carrying 12 marks and another passage of about 350-500 words carrying 08 marks

1. A passage to test reading comprehension. The passage can be literary, factual or discursive. The length of the passage should be between *600-700* words. 12

2. A shorter passage of *350-500* words for note-making and abstraction. 08

SECTION B

Advanced Writing Skills **35 Marks** **70 Periods**

3. One out of two short compositions of not more than 50 words each e.g. advertisement and notices, designing or drafting posters, writing formal and informal invitations and replies. 5

4. A report or a factual description based on verbal input provided (one out of two) (100-125 words) 10

5. Writing one out of two letters based on verbal input. 10
   Letter types include:

   (a) business or official letters (for making enquiries, registering complaints, asking for and giving information, placing orders and sending replies):

   (b) letters to the editor (giving suggestions on an issue)

   (c) application for a job

6. One out of two compositions based on visual and/or verbal input (150-200 words). Output may be descriptive or argumentative in nature such as an article, or a speech. 10

SECTION C

Text Books		**45 Marks**	**100 Periods**
Prescribed Books:			
Hornbill		**30**	
7.	One out of two extracts based on poetry from the text to test comprehension and appreciation	4	
8.	Three out of four short questions from the poetry section to test local and global comprehension of text.	6	
9.	Five short answer questions based on the lessons from prescribed text. (2x5)	10	
10.	One out of two long answer type questions based on the text to test global comprehension and extrapolation beyond the set text. (Expected word limit about 125-150 words each)	10	
Snapshots		***15***	
11.	One out of two long answer type question based on Supplementary Reader to test comprehension and extrapolation of theme, character and incidents (Expected word limit about 125-150 words)	7	
12.	Four short answer questions from the Supplementary Reader (2x4)	8	

Prescribed Books

1. **Hornbill : English Reader** ***published by National Council of Education Research and Training, New Delhi.***
2. **Snapshots : Supplementary Reader** ***published by National Council of Education Research and Training, New Delhi.***

4. हिंदी (आधार) कोड सं० 302

प्रस्तावना

दसवीं कक्षा तक हिंदी का अध्ययन करने वाला विद्यार्थी समझते हुए पढ़ने व सुनने के साथ–साथ हिंदी में सोचने और उसे मौखिक एवं लिखित रूप में व्यक्त कर पाने की सामान्य दक्षता अर्जित कर चुका होता है। उच्चतर माध्यमिक स्तर पर आने के बाद इन सभी दक्षताओं को सामान्य से ऊपर उस स्तर तक ले जाने की दरकार होती है, जहाँ भाषा का इस्तेमाल भिन्न–भिन्न व्यवहार–क्षेत्रों की मांगों के अनुरूप किया जा सके। आधार पाठ्यक्रम साहित्यिक बोध के साथ–साथ भाषाई दक्षता के विकास को ज्यादा अहमियत देता है। यह पाठ्यक्रम उन विद्यार्थियों के लिए उपयोगी साबित होगा, जो आगे विश्वविद्यालय में अध्ययन करते हुए हिंदी को एक विषय के रूप में पढ़ेंगे या विज्ञान/समाजविज्ञान के किसी विषय को हिंदी माध्यम से पढ़ना चाहेंगे। यह उनके लिए भी उपयोगी साबित होगा, जो उच्चतर माध्यमिक स्तर की शिक्षा के बाद किसी तरह के रोज़गार में लग जाएंगे। वहां कामकाजी हिंदी का आधारभूत अध्ययन काम आएगा। जिन विद्यार्थियों की दिलचस्पी जनसंचार माध्यमों में होगी, उनके लिए यह पाठ्यक्रम एक आरंभिक पृष्ठभूमि निर्मित करेगा। इसके साथ ही यह पाठ्यक्रम सामान्य रूप से तरह–तरह के साहित्य के साथ विद्यार्थियों के संबंध को सहज बनाएगा। विद्यार्थी भाषिक अभिव्यक्ति के सूक्ष्म एवं जटिल रूपों से परिचित हो सकेंगे, वे यथार्थ को अपने विचारों में व्यवस्थित करने के साधन के तौर पर भाषा का अधिक सार्थक उपयोग कर पाएंगे और उनमें जीवन के प्रति मानवीय संवेदना एवं सम्यक् दृष्टि का विकास हो सकेगा।

उद्देश्य

- इन माध्यमों और विधाओं के लिए उपयुक्त भाषा, प्रयोग की इतनी क्षमता उनमें आ चुकी होगी कि वे स्वयं इससे जुड़े उच्चतर पाठ्यक्रमों को समझ सकेंगे।
- सामाजिक हिंसा की भाषिक अभिव्यक्ति की समझ।
- भाषा के अंदर सक्रिय सत्ता संबंध की समझ।
- सृजनात्मक साहित्य को सराह पाने और उसका आनंद उठाने की क्षमता का विकास तथा भाषा में सौंदर्यात्मकता उत्पन्न करने वाली सृजनात्मक युक्तियों की संवेदना का विकास।
- विद्यार्थियों के भीतर सभी प्रकार की विविधताओं (धर्म, जाति, जेंडर, क्षेत्र भाषा संबंधी) के प्रति सकारात्मक एवं विवेकपूर्ण रवैये का विकास।

- पठन–सामग्री को भिन्न–भिन्न कोणों से अलग–अलग सामाजिक, सांस्कृतिक चिंताओं के परिप्रेक्ष्य में देखने का अभ्यास कराना तथा नज़रिये की एकांगिकता के प्रति आलोचनात्मक दृष्टि का विकास करना।

- विद्यार्थी में स्तरीय साहित्य की समझ और उसका आनंद उठाने की स्फूर्ति, विकास, उसमें साहित्य को श्रेष्ठ, बनाने वाले तत्वों की संवेदना का विकास।

- विभिन्न ज्ञानानुशासनों के विमर्श की भाषा के रूप में हिंदी की विशिष्ट प्रकृति और उसकी क्षमताओं का बोध।

- कामकाजी हिंदी के उपयोग के कौशल का विकास।

- संचार माध्यमों (प्रिंट और इलेक्ट्रोनिक) में प्रयुक्त हिंदी की प्रकृति से परिचय और इन माध्यमों की मांगों के अनुरूप मौखिक एवं लिखित अभिव्यक्ति का विकास।

- विद्यार्थी में किसी भी अपरिचित विषय से संबंधित प्रासंगिक जानकारी के स्रोतों का अनुसंधान और उन्हें व्यवस्थित ढंग से उनकी मौखिक और लिखत प्रस्तुति करने की क्षमता का विकास।

शिक्षण–युक्तियाँ

- कुछ बातें इस स्तर पर हिंदी शिक्षण के लक्ष्यों के संदर्भ में सामान्य रूप से कही जा सकती हैं। एक तो यही कि कक्षा में दबाव एवं तनाव मुक्त माहौल होने की स्थिति में ही ये लक्ष्य हासिल किए जा सकते हैं। चूँकि इस पाठ्यक्रम में तैयारशुदा उत्तरों को कंटस्थ कर लेने की कोई अपेक्षा नहीं है, इसलिए चीजों को समझने और उस समझ के आधार पर उत्तर को शब्दबद्ध करने की योग्यता विकसित करना ही हमारा काम है। इस योग्यता के विकास के लिए कक्षा में विद्यार्थियों और शिक्षक के बीच निर्बाध संवाद जरूरी है। विद्यार्थी अपनी शंकाओं और उलझनों को जितना ही अधिक व्यक्त करेंगे, उतनी ही ज्यादा सफाई उनमें आ पाएगी।

- भाषा की कक्षा से समाज में मौजूद विभिन्न प्रकार के द्वंद्वों पर बातचीत का मंच बनाना चाहिए। उदाहरण के लिए संविधान में शब्द विशेष के प्रयोग पर मनाही को चर्चा का विषय बनाया जा सकता है। यह समझ जरूरी है कि छात्रों को सिर्फ सकारात्मक पाठ देने से नहीं काम चलेगा बल्कि उन्हें

समझाकर भाषिक यथार्थ का सीधे सामना करवाने वाले पाठों से परिचय होना जरूरी है।

- शंकाओं और उलझनों को रखने के अलावा भी कक्षा में विद्यार्थियों को अधिक–से–अधिक बोलने के लिए प्रेरित किया जाना जरूरी है। उन्हें यह अहसास कराया जाना चाहिए कि वे पठित सामग्री पर राय देने का अधिकार और उसकी काबिलियत रखते हैं। उनकी राय को तवज्जों देने और उसे बेहतर तरीके से पुनर्प्रस्तुत करने की अध्यापकीय शैली यहां बहुत उपयोगी होगी।

- विद्यार्थियों को संवाद में शामिल करने के लिए यह भी जरूरी होगा कि उन्हें एक नामहीन समूह न मानकर अलग–अलग व्यक्तियों के रूप में अहमियत दी जाए। शिक्षक को अक्सर एक कुशल संयोजक की भूमिका में स्वयं को देखना होगा, जो किसी भी इच्छुक व्यक्ति को संवाद का भागीदार बनने से वंचित नहीं रखता, उसके कच्चे–पक्के वक्तव्य को मानक भाषा–शैली में ढाल कर उसे एक आभा दे देता है और मौन को अभिव्यंजना मान बैठे लोगों को मुखर होने पर बाध्य कर देता है।

- अप्रत्याशित विषयों पर चिंतन करने और सोचे हुए की मौखिक व लिखित अभिव्यक्ति करने की योग्यता का विकास शिक्षक के सचेत प्रयास से ही संभव है। इसके लिए शिक्षक को एक निश्चित अंतराल पर नए–नए विषय प्रस्तावित कर लेख एवं अनुच्छेद लिखने तथा संभाषण करने के लिए पूरी कक्षा को प्रेरित करना होगा। यह अभ्यास ऐसा है, जिसमें विषयों की कोई सीमा तय नहीं की जा सकती। विषय की निस्सीम संभावना के बीच शिक्षक यह सुनिश्चित कर सकता है कि उसके विद्यार्थी किसी निबंध–संकलन या कुंजी से तैयारशुदा सामग्री को उतार भर न ले। तैयारशुदा सामग्री के लोभ से, बाध्यतावश ही सही मुक्ति पाकर विद्यार्थी नये तरीके से सोचने और उसे शब्दबद्ध करने के यत्न में सन्नद्ध होंगे। मौखिक अभिव्यक्ति पर भी विशेष ध्यान देने की ज़रूरत है, क्योंकि भविष्य में साक्षात्कार संगोष्ठी जैसे मौकों पर यही योग्यता विद्यार्थी के काम आती है। इसके अभ्यास के सिलसिले में शिक्षक को उचित हावभाव, मानक उच्चारण, पॉज, बलाघात, हाजिरजवाबी इत्यादि पर खास बल देना होगा।

- मध्य कालीन काव्य की भाषा के मर्म से विद्यार्थी का परिचय कराने के लिए ज़रूरी होगा कि किताबों में आए काव्यांशों की संगीतबद्ध प्रस्तुतियों के ऑडियो–वीडियो कैसेट तैयार किए जाएं। अगर आसानी से कोई गायक/गायिका मिले तो कक्षा में मध्यकालीन साहित्य के अध्यापन–शिक्षण में उससे मदद ली जानी चाहिए।

- वृत्तचित्रों और फीचर फिल्मों को शिक्षण सामग्री के तौर पर इस्तेमाल करने की ज़रूरत है। इनके प्रदर्शन के क्रम में इन पर लगातार बातचीत के ज़रिए सिनेमा के माध्यम से भाषा के प्रयोग की विशिष्टता की पहचान कराई जा सकती है और हिंदी की अलग–अलग छटा दिखाई जा सकती है। विद्यार्थियों को स्तरीय परीक्षा करने को भी कहा जा सकता है।

- कक्षा में सिर्फ एक पाठ्यपुस्तक की भौतिक उपस्थिति से बेहतर यह है कि शिक्षक के हाथ में तरह–तरह की पाठ्यसामग्री को विद्यार्थी देख सकें और शिक्षक उनका कक्षा में अलग–अलग मौकों पर इस्तेमाल कर सकें।

- भाषा लगातार ग्रहण करने की क्रिया में बनती है, इसे प्रदर्शित करने का एक तरीका यह भी है कि शिक्षक खुद यह सिखा सकें कि वे भी शब्दकोश, साहित्यकोश, संदर्भग्रंथ की लगातार मदद ले रहे हैं। इससे विद्यार्थियों में इसका इस्तेमाल करने को लेकर तत्परता बढ़ेगी। अनुमान के आधार पर निकटतम अर्थ तक पहुंचकर संतुष्ट होने की जगह वे सही अर्थ की खोज करने का अर्थ समझा जाएंगे। इससे शब्दों की अलग–अलग रंगत का पता चलेगा और उनमें संवेदनशीलता बढ़ेगी। वे शब्दों के बारीक अंतर के प्रति और सजग हो पाएंगे।

- कक्षा–अध्यापन के पूरक कार्य के रूप में सेमिनार, ट्यूटोरियल कार्य, समस्या–समाधान कार्य, समूह चर्चा, परियोजना, कार्य, स्वाध्याय आदि पर बल दिया जाना चाहिए। पाठ्यक्रम में जनसंचार माध्यमों से संबंधित अंशों को देखते हुए यह जरूरी है कि समय–समय पर इन माध्यमों से जुड़े व्यक्तियों और विशेषज्ञो को भी स्कूल में बुलाया जाए तथा उनकी देख–रेख में कार्यशालाएं आयोजित की जाएं।

5. हिंदी (केंद्रिक)
कोड सं. 302

कक्षा–11 **पूर्णांक–100**

(क)	अपठित बोध (गद्यांश और काव्यांश–बोध)	10 +5	15
(ख)	रचनात्मक लेखन (कामकाजी हिंदी और रचनात्मक लेखन)		25
(ग)	पाठ्य पुस्तक : **आरोह** (भाग–1)	20+15	35
	पूरक पुस्तक : **वितान** (भाग–1)		15
(घ)	मौखिक अभिव्यक्ति		10

क) अपठित बोध : 15

1. काव्यांश बोधः (काव्यांश पर आधारित पाँच लघूत्तरात्मक प्रश्न) 05
2. गद्यांश बोधः (गद्यांश पर आधारित बोध, प्रयोग, रचनांतरण, शीर्षक आदि पर लघूत्तरात्मक प्रश्न 10

(ख) रचनात्मक लेखन : (कामकाजी हिंदी और रचनात्मक लेखन) 15+10 25

रचनात्मक लेखन पर दो प्रश्न

3. • निबंध 10
4. • कार्यालयी पत्र 05

निर्धारित पुस्तक **'अभिव्यक्ति और माध्यम'** के आधार पर जनसंचार की विधाओं पर दो प्रश्न

5. • प्रिंट माध्यम (समाचार और सम्पादकीय) 05
   • रिपोर्ट/आलेख
6. फीचर लेखन (जीवन–संदर्भों से जुड़ी घटनाओं और स्थितियों पर) 05

ग आरोह (काव्य–भाग– 20 अंक, गद्य–भाग–15 अंक) 35

(काव्य–भाग)

7. दो काव्यांशों मे से किसी एक पर अर्थग्रहण के चार प्रश्न (2+2+2+2) 8
8. एक काव्यांश के सौंदर्यबोध पर दो प्रश्न (3+3) 06
9. कविता की विषय–वस्तु पर आधारित तीन लघूत्तरात्मक प्रश्न (2+2+2) 06

(गद्य–भाग)

10. दो में से एक गद्यांश पर आधारित अर्थग्रहण संबंधित तीन प्रश्न (2+2+2) 06
11. पाठों की विषयवस्तु पर आधारित चार में से तीन बोधात्मक प्रश्न (3+3+3) 09

वितान भाग : 1 **15**

12. पाठों की विषयवस्तु पर आधारित चार में से तीन लघूत्तरात्मक प्रश्न (3+3+3) 9

13. विषयवस्तु पर आधारित दो में से एक निबंधात्मक प्रश्न 6

घ मौखिक परीक्षण 10 अंक

श्रवण (सुनना): वर्णित या पठित सामग्री को सुनकर अर्थग्रहण करना, वार्तालाप, वाद–विवाद, भाषण, कवितापाठ आदि को सुनकर समझना, मूल्यांकन करना और अभिव्यक्ति के ढंग को समझना। 5

बोलना: भाषण, सस्वर कविता–पाठ, वार्तालाप और उसकी औपचारिकता, कार्यक्रम–प्रस्तुति, कथा–कहानी अथवा घटना सुनाना, परिचय देना, भावानुकूल संवाद–वाचन। 5

वार्तालाप की दक्षताएँ :

टिप्पणीः वार्तालाप की दक्षताओं का मूल्यांकन निरंतरता के आधार पर परीक्षा के समय होगा। निर्धारित 10 अंको में से 5 श्रवण (सुनना) के मूल्यांकन के लिए और 5 (बोलना) के मूल्यांकन के लिए होंगे।

श्रवण (सुनना) टिप्पणी का मूल्यांकन:

परीक्षक किसी प्रासंगिक विषय पर एक अनुच्छेद का स्पष्ट वाचन करेगा। अनुच्छेद, तथ्यात्मक या सुझावात्मक हो सकता है। अनुच्छेद लगभग 250 शब्दों का होना चाहिए। परीक्षक/अध्यापक को सुनते–सुनते परीक्षार्थी अलग कागज़ पर दिए हुए श्रवण–बोध के अभ्यासों को हल कर सकेंगे।

अभ्यास रिक्तस्थान–पूर्ति, बहुविकल्पी अथवा सही–गलत का चुनाव आदि विधाओं में हो सकते हैं। आधे–आधे अंक के 10 परीक्षण–प्रश्न होंगे।

वाचन (बोलना) का मूल्यांकन:

1. **चित्रों के क्रम पर आधारित वर्णन:** इस भाग में अपेक्षा की जाएगी कि विवरणात्मक भाषा का प्रयोग करें।
2. **किसी चित्र का वर्णन:** चित्र लोगों या स्थानों के हो सकते हैं।
3. **किसी निर्धारित विषय पर बोलना,** जिससे विद्यार्थी/परीक्षार्थी अपने व्यक्तिगत अनुभव का प्रत्यास्मरण कर सके।
4. कोई कहानी सुनाना या किसी घटना का वर्णन करना।

टिप्पणी :

परीक्षण से पूर्व परीक्षार्थी को कुछ तैयारी के लिए समय दिया जाए।

- विवरणात्मक भाषा में वर्तमान काल का प्रयोग अपेक्षित है।
- निर्धारित विषय परीक्षार्थी के अनुभव–जगत के हों जैसे

  कोई चुटकला या हास्य प्रसंग सुनाना।

  हाल में पढ़ी पुस्तक या देखे सिनेमा की कहानी सुनाना।

जब परीक्षार्थी बोलना आरंभ कर दे तो परीक्षक कम से कम हस्तक्षेप करें।

कौशलों के अंतरण का मूल्यांकन

(इस बात का निश्चय करना कि क्या विद्यार्थी में श्रवण और वाचन की निम्नलिखित योग्यताएँ हैं।)

श्रवण (सुनना)	वाचन (बोलना)
विद्यार्थी में–	**विद्यार्थी –**
1. परिचित संदर्भों में प्रयुक्त शब्दों और पदों को समझने की सामान्य योग्यता है किन्तु वह सुसबंद्ध आशय को नहीं समझ पाता।	1. केवल अलग–अलग शब्दों और पदों के प्रयोग की योग्यता प्रदर्शित करता है किन्तु एक सुसंबद्ध स्तर पर नहीं बोल सकता।
3. छोटे संबद्ध कथनों को परिचित संदर्भो में समझने की योग्यता है।	3. परिचित संद्र्भो में केवल छोटे संबद्ध कथनों का सीमित शुद्धता से प्रयोग करता है।
5. परिचित या अपरिचित दोनों संदर्भों में कथित सूचना को स्पष्ट समझने की योग्यता है।	5. अपेक्षाकृत दीर्घ भाषण में अधिक जटिल कथनों के प्रयोग की योग्यता प्रदर्शित करता है, अभी भी कुछ अशुद्धियां करता है, जिससे प्रेषण में रुकावट आती है।
7. दीर्घ कथनों की श्रृंखला को पर्याप्त शुद्धता से समझने और निष्कर्ष निकाल सकने की योग्यता है।	7. अपरिचित स्थितियों में विचारों को तार्किक ढंग से संगठित कर धारा–प्रवाह रूप में प्रस्तुत करता है। ऐसी गलतियाँ करता है जिनसे प्रेषण में रूकावट नहीं आती।
9. जटिल कथनों के विचार–बिंदुओं को समझने की योग्यता प्रदर्शित करने की क्षमता है वह उद्देश्य के अनुकूल सुनने की कुशलता प्रदर्शित करता है।	9. उद्देश्य और श्रोता के लिए उपयुक्त शैली को अपना सकता है, केवल मामूली गलतियाँ करता है।

निर्धारित पुस्तकें:

(i) **आरोह भाग–1** एन.सी.ई.आर.टी. द्वारा प्रकाशित

(ii) **'वितान' भाग–1** एन.सी.ई.आर.टी. द्वारा प्रकाशित

(iii) **अभिव्यक्ति और माध्यम** एन.सी.ई.आर.टी. द्वारा प्रकाशित

हिंदी (केंद्रिक)
कोड सं. 302
कक्षा–12

			अंक
(क)	अपठित बोध (गद्यांश और काव्यांश–बोध)	15+5	20
(ख)	रचनात्मक लेखन एवं जन–संचार माध्यम		25
(ग)	• **आरोह** भाग–2 (काव्यांश–20 गद्यांश–20)		40
	• पूरक पुस्तक : **वितान** भाग–2		15

क	**अपठित बोध :**		**20**
1.	काव्यांश–बोध पर आधारित पाँच लघूत्तरात्मक प्रश्न		05
2.	गद्यांश–बोध पर आधारित बोध, प्रयोग, रचनांतारण, शीर्षक आदि पर लघूत्तरात्मक प्रश्न		15
ख	**रचनात्मक लेखन एवं जन–संचार माध्यम:**		**25**
	रचनात्मक लेखन पर दो प्रश्न		10
3.	• निबंध		05
4.	• कार्यालयी पत्र		05
	जन–संचार की निम्नलिखित विधाओं पर दो प्रश्न–		
5.	प्रिंट माध्यम संपादकीय		05
	• रिपोर्ट		
	• आलेख		
6.	फीचर लेखन (जीवन–संदर्भो से जुड़ी घटनाओं और स्थितियों पर फीचर–लेखन)		05
ग	**आरोह भाग–2**	**(20+20)**	**40**
	काव्य–भाग:		
7.	दो काव्यांशों में से किसी एक पर अर्थग्रहण के 4 प्रश्न	(2+2+2+2)	08
8.	एक काव्यांशं के सौंदर्यबोध पर दो प्रश्न	(3+3)	06
9.	कविताओं की विषय–वस्तु से संबंधित तीन में से दो लघूत्तरात्मक प्रश्न	(3+3)	06
10.	दो में से एक गद्यांश पर आधारित अर्थ–ग्रहण के चार प्रश्न	(2+2+2+2)	08

11.	पाठों की विषय वस्तु पर आधारित पांच में से चार बोधात्मक प्रश्न		12
पूरक पुस्तक : वितान भाग 2			**15**
12.	पाठों की विषयवस्तु पर आधारित तीन में से दो बोधात्मक प्रश्न	(3+3)	06
13.	विचार/संदेश पर आधारित तीन में से दो लघूत्तरात्मक प्रश्न	(2+2)	04
14.	विषय वस्तु पर आधारित दो में से एक निबंधात्मक प्रश्न		05

निर्धारित पुस्तकें:

(i) **आरोह भाग–2** एन.सी.ई.आर.टी. द्वारा प्रकाशित

(ii) **'वितान' भाग–2** एन.सी.ई.आर.टी. द्वारा प्रकाशित

(iii) **अभिव्यक्ति और माध्यम** एन.सी.ई.आर.टी. द्वारा प्रकाशित

5. हिंदी (ऐच्छिक) कोड सं० 002

XI-XII

उच्चतर माध्यमिक स्तर में प्रवेश लेने वाला विद्यार्थी पहली बार सामान्य शिक्षा से विशेष अनुशासन की शिक्षा की ओर उन्मुख होता है। दस वर्षों में विद्यार्थी भाषा के कौशलों से परिचित हो जाता है। भाषा और साहित्य के स्तर पर उसका दायरा अब घर पास–पड़ोस, स्कूल, प्रांत और देश से होता हुआ धीरे–धीरे विश्व तक फैल जाता है। वह इस उम्र में पहुँच चुका है कि देश की सांस्कृतिक, सामाजिक, राजनीतिक और आर्थिक समस्याओं पर विचार–विमर्श कर सके, एक ज़िम्मेदार नागरिक की तरह अपनी ज़िम्मेदारियों को समझ सके तथा देश और खुद को सही दिशा दे सकने में भाषा की ताकत को पहचान सके। ऐसे दृढ़ भाषिक और वैचारिक आधार के साथ जब विद्यार्थी आता है तो उसे विमर्श की भाषा के रूप में हिंदी की व्यापक समझ और प्रयोग में दक्ष बनाना सबसे पहला उद्देश्य होगा। किशोरावस्था से युवावस्था के इस नाज़ुक मोड़ पर किसी भी विषय का चुनाव करते समय बच्चे और उनके अभिभावक इस बात को लेकर सबसे अधिक चिंतित रहते हैं कि चयनित विषय उनके भावी कैरियर और जीविका के अवसरों में मदद करेगा कि नहीं। इस उम्र के विद्यार्थियों में चिंतन और निर्णय करने की प्रवृत्ति भी प्रबल होती है। इसी आधार पर वे अपने मानसिक, सामाजिक, बौद्धिक और भाषिक विकास के प्रति भी सचेत होते हैं और अपने भावी अध्ययन की दिशा तय करते हैं। इस स्तर पर ऐच्छिक हिंदी का अध्ययन एक सृजनात्मक, साहित्यिक, सांस्कृतिक और विभिन्न प्रयुक्तियों की भाषा के रूप में होगा। इस बात पर भी बल दिया जाएगा कि निरंतर विकसित होती हिंदी के अखिल भारतीय स्वरूप से बच्चे का रिश्ता बन सके।

इस स्तर पर विद्यार्थियों में भाषा के लिखित प्रयोग के साथ–साथ उसके मौखिक प्रयोग की कुशलता और दक्षता का विकास भी ज़रूरी है। प्रयास यह भी होगा कि विद्यार्थी अपने बिखरे हुए विचारों और भावों की सहज और मौलिक अभिव्यक्ति की क्षमता हासिल कर सके।

इस पाठ्यक्रम के अध्ययन से (i) विद्यार्थी अपनी रूचि और आवश्यकता के अनुरूप साहित्य का गहन और विशेष अध्ययन जारी रख सकेंगे। (ii) विश्वविद्यालय स्तर पर निर्धारित हिंदी साहित्य से संबंधित पाठ्यक्रम के साथ सहज संबंध स्थापित कर सकेंगे। (iii) लेखन कौशल के व्यवहारिक और सृजनात्मक रूपों की अभिव्यक्ति में सक्षम हो सकेंगे। (iv) रोजगार के किसी भी क्षेत्र में जाने पर भाषा का प्रयोग प्रभावी ढंग से कर सकेंगे। और (v) यह पाठ्यक्रम विद्यार्थी को संचार तथा प्रकाशन जैसे विभिन्न–क्षेत्रों में अपनी क्षमता आजमाने के अवसर प्रदान कर सकता है।

उद्देश्य

- सृजनात्मक साहित्य की सराहना, उसका आनंद उठाना और उसके प्रति सृजनात्मक और आलोचनात्मक दृष्टि का विकास।
- साहित्य की विविध विधाओं (कविता, कहानी, निबंध आदि) महत्वपूर्ण कवियों और रचनाकारों, प्रमुख धाराओं और शैलियों का परिचय कराना।
- भाषा की सृजनात्मक बारीकियों और व्यावहारिक प्रयोग का बोध तथा उसका संदर्भ और समय के अनुसार प्रभावशाली ढंग से मौखिक और लिखित अभिव्यक्ति कर सकना।
- विभिन्न ज्ञानानुशासनों के विमर्श की भाषा के रूप में हिंदी की विशिष्ट प्रकृति एवं क्षमता का बोध कराना।
- साहित्य की प्रभावकारी क्षमता का उपयोग करते हुए सभी प्रकार की विविधताओं (धर्म, जाति, लिंग, वर्ग, भाषा आदि) एवं अंतरों के प्रति सकारात्मक और संवेदनशील रवैये का विकास कराना।
- देश–विदेश में प्रचलित हिंदी के रूपों से परिचित कराना।
- संचार–माध्यमों (प्रिंट और इलेक्ट्रॉनिक) में प्रयुक्त हिंदी की प्रकृति से अवगत कराना और नवीन विधियों के प्रयोग की क्षमता का विकास करना।
- साहित्य की व्यापक धारा के बीच रखकर रचनाओं का विश्लेषण और विवेचन करने की क्षमता हासिल करना।
- विपरीत परिस्थितियों में भी भाषा का इस्तेमाल शांति के साथ करना।
- अमूर्त विषयों पर प्रयुक्त भाषा का विकास तथा कल्पनाशीलता तथा मौलिक चिंतन के लिए प्रयोग करना।

शिक्षण–युक्तियाँ :

इन कक्षाओं में अध्यापकों की भूमिका उचित वातावरण निर्माण में सहायक की होनी चाहिए। उनको भाषा और साहित्य की पढ़ाई में इस बात पर ध्यान देने की ज़रूरत होगी कि–

- कक्षा का वातावरण संवादात्मक हो ताकि अध्यापक, विद्यार्थी और पुस्तक तीनों के बीच एक रिश्ता बन सके।

- गलत से सही की ओर पहुँचने का प्रयास हो। यानी बच्चों को स्वतंत्र रूप से बोलने, लिखने और पढ़ने दिया जाए और फिर उनसे होने वाली भूलों की पहचानकर अध्यापक अपनी पढ़ाने की शैली में परिवर्तन करे।
- ऐसे शिक्षण–बिंदुओं की पहचान की जाए जिससे कक्षा में विद्यार्थी की सक्रिय भागीदारी रहे और अध्यापक भी उनका साथी हो।
- शारीरिक बाधाग्रस्त विद्यार्थियों के लिए उपयुक्त शिक्षण सामग्री का इस्तेमाल किया जाए तथा किसी भी प्रकार से उन्हें अन्य विद्यार्थियों से कमतर या अलग न समझा जाए।
- विभिन्न विधाओं से संबंधित रूचिकर और महत्वपूर्ण 10 अन्य पुस्तकें– जिनका जिक्र पाठ्यपुस्तक के अंत में किया जाएगा–स्वयं पढ़ने के लिए प्रेरित किया जाए।
- कक्षा में अध्यापक को हर प्रकार की विभिन्नताओं (लिंग, धर्म, जाति, वर्ग आदि) के प्रति साकारात्मक और संवेदनशील वातावरण निर्मित करना चाहिए।
- सृजनात्मकता के अभ्यास के लिए विद्यार्थी से साल में कम से कम दो रचनाएं लिखवाई जाएं।

हिंदी (ऐच्छिक)
कोड सं. 002
कक्षा–11

(क)	अपठित बोध (गद्यांश और काव्यांश बोध)	(10+5)	15
(ख)	रचनात्मक तथा व्यावहारिक लेखन		25
(ग)	**अंतरा** भाग–1 (काव्य भाग)		20
	(गद्य–भाग)		15
	अंतराल, भाग–I		15
(घ)	मौखिक		10

क	**अपठित बोध : (गद्यांश और काव्यांश बोध)**		**20**
1.	गद्यांश पर आधारित बोध, प्रयोग, रचानांतरण, शीर्षक आदि पर लघूत्तरात्मक प्रश्न		15
2.	काव्यांश पर आधारित पाँच लघूत्तरात्मक प्रश्न		05
ख	**रचनात्मक तथा व्यावहारिक लेखन :**		**25**
	'अभिव्यक्ति और माध्यम' के आधार पर सृजनात्मक लेखन से संबंधित दो प्रश्न		
3.	• निबंध		10
4.	• कार्यालयी पत्र		05
5.	व्यावहारिक लेखन (प्रतिवेदन, कार्यसूची, कार्यवृत्त इत्यादि) पर दो प्रश्न	(5+5)	10
ग	**अंतरा भाग–1**	(20+15)	**35**
	काव्य–भाग:		**20**
6.	सप्रसंग व्याख्या (दो में से एक)		08
7.	कविताओं के कथ्य पर दो प्रश्न	(3+3)	06
8.	काव्य सौंदर्य पर दो प्रश्न	(3+3)	06

	गद्य–भाग:		**15**
9.	सप्रसंग व्याख्या (दो में से एक)		04
10.	पाठों की विषय वस्तु पर आधारित तीन में से दो प्रश्न	(3+3)	06
11.	किसी एक लेखक/कवि का साहित्यिक परिचय		05
	अंतराल : भाग 1		**15**
12.	विषय वस्तु पर आधारित (तीन में से दो प्रश्न)	(4+4)	08
13.	विविध विधाओं पर आधारित दो बोधात्मक प्रश्न	(4+3)	07

(घ) मौखिक परीक्षण : (ऐच्छिक) 5+5 10

श्रवण (सुनना) : वर्णित या पठित सामग्री को सुनकर अर्थग्रहण करना, वार्तालाप करना, वाद–विवाद भाषण, कवितापाठ आदि को सुनकर समझना, मूल्यांकन करना और अभिव्यक्ति ढंग को समझना।

बोलना : भाषण, सस्वर कविता–पाठ, वार्तालाप और उसकी औपचारिकता कार्यक्रम–प्रस्तुति, कथा–कहानी अथवा घटना सुनाना, परिचय देना, भावानुकूल संवाद–वाचन।

वार्तालाप की दक्षताएँ:

टिप्पणी : वार्तालाप की दक्षताओं का मूल्यांकन निरंतरता के आधार पर परीक्षा के समय ही होगा। निर्धारित 10 अंकों में से 5 श्रवण (सुनना) के मूल्यांकन के लिए और 5 (बोलना) के मूल्यांकन के लिए होंगे।

श्रवण (सुनना) का मूल्यांकन:

परीक्षक किसी प्रासंगिक विषय पर एक अनुच्छेद का स्पष्ट वाचन करेगा। अनुच्छेद तथ्यात्मक या सुझावात्मक हो सकता है। अनुच्छेद लगभग 250 शब्दों का होना चाहिए। अध्यापक को सुनते–सुनते परीक्षार्थी/परीक्षक अलग कागज़ पर दिए हुए श्रवण बोध के अभ्यासों को हल कर सकेंगे।

अभ्यास रिक्तस्थान–पूर्ति, बहुविकल्पी अथवा सत्य/असत्य का चुनाव आदि विधाओं में हो सकते हैं। प्रत्येक आधे अंक के लिए 1–1 परीक्षण प्रश्न होगा।

वाचन (बोलना) का मूल्यांकन:

1. **चित्रों के क्रम पर आधारित वर्णन:** इस भाग में अपेक्षा की जाएगी कि विद्यार्थी विवरणात्मक भाषा का प्रयोग करें।
2. **किसी चित्र का वर्णन:** चित्र लोगों या स्थानों के हो सकते हैं।
3. **किसी निर्धारित विषय पर बोलना :** जिससे विद्यार्थी अपने व्यक्तिगत अनुभव का प्रत्यास्मरण कर सकें।
4. कोई कहानी सुनाना या किसी घटना का वर्णन करना।

टिप्पणी:

- परीक्षण से पूर्व परीक्षार्थी को कुछ तैयारी के लिए समय दिया जाए।
- विवरणात्मक भाषा में वर्तमान काल का प्रयोग अपेक्षित है।
- निर्धारित विषय परीक्षार्थी के अनुभव–जगत के हों जैसे:

  कोई चुटकला या हास्य प्रसंग सुनाना।

  हाल में पढ़ी पुस्तक या देखे सिनेमा की कहानी सुनाना।

जब परीक्षार्थी बोलना प्रारंभ कर दे तो परीक्षक कम से कम हस्तक्षेप करे।

कौशलों के अंतरण का मूल्यांकन माप

श्रवण (सुनना)	वाचन (बोलना)
विद्यार्थी में–	**विद्यार्थी**
1. परिचित संदर्भो में प्रयुक्त शब्दों और पदों को प्रयोग समझने की सामान्य योग्यता है किन्तु वह सुसबंद्ध आशय को नहीं समझ पाता।	1. केवल अलग–अलग शब्दों और पदों के की योग्यता प्रदर्शित करता है, किन्तु एक सुसंबद्ध स्तर पर नहीं बोल सकता।
3. परिचित संदर्भो में से छोटे संबद्ध कथनों को समझने की योग्यता है।	3. परिचित संदर्भो में केवल छोटे संबद्ध कथनों का सीमित शुद्धता से प्रयोग करता है।
5. परिचित या अपरिचित दोनों संदर्भो में कथित सूचना को स्पष्ट समझने की योग्यता है।	5. अपेक्षाकृत दीर्घ भाषण में अधिक जटिल कथनों के प्रयोग की योग्यता प्रदर्शित करता है, अभी भी कुछ अशुद्धियां करता है जिससे प्रेषण में रूकावट आती है।
7. दीर्घ कथनों की श्रृंखला को पर्याप्त शुद्धता से समझने और निष्कर्ष निकालने की योग्यता है।	7. अपरिचित स्थितियों में विचारों को तार्किक ढंग से संगठित कर धारा–प्रवाह रूप में प्रस्तुत करता है। ऐसी गलतियाँ करता है, जिनसे प्रेषण में रूकावट नहीं आती।
9. जटिल कथनों के विचार–बिंदुओं को समझने की योग्यता प्रदर्शित करने की क्षमता है। वह उद्देश्य के अनुकूल सुनने की कुशलता प्रदर्शित करता है।	9. उद्देश्य और श्रोता के लिए उपयुक्त शैली को अपना सकता है, केवल मामूली गलतियां करता है।

निर्धारित पुस्तकें:

(i) **अंतरा भाग–1** एन.सी.ई.आर.टी. द्वारा प्रकाशित

(ii) **अंतराल भाग–1** एन.सी.ई.आर.टी. द्वारा प्रकाशित

(iii) **अभिव्यक्ति और माध्यम** एन.सी.ई.आर.टी. द्वारा प्रकाशित

हिंदी (ऐच्छिक) कोड सं. 002

कक्षा–12

(क)	अपठित बोध (गद्यांश और काव्यांश बोध)	15+5	20
(ख)	रचनात्मक तथा व्यावहारिक लेखन		25
(ग)	**अंतरा** (भाग–2) ● काव्य–भाग		20
	● गद्य–भाग		20
	अंतराल (भाग–2)		15

क) अपठित बोध : (गद्यांश और काव्यांश बोध) 20

1. गद्यांश बोधः गद्यांश पर आधारित वोध, प्रयोग, स्थानांनतरण शीर्षक आदि पर लघूत्तरात्मक प्रश्न 15
2. काव्यांश बोधः काव्यांश पर आधारित पाँच लघूत्तरात्मक प्रश्न 05

(ख) रचनात्मक तथा व्यावहारिक लेखन : 25

सृजनात्मक लेखन से संबंधित दो प्रश्न

3. निबंध 10
4 कार्यालयी पत्र 05
5. कार्यालय **'अभिव्यक्ति और माध्यम'** के आधार पर व्यावहारिक लेखन पर दो प्रश्न (5+5) 10

(ग) अंतरा भाग–2 (20+20 अंक) 40

काव्य–भागः 20

6. (i) सप्रसंग व्याख्या (दो में से एक) 8
7. (ii) कविता के कथ्य पर दो प्रश्न (3+3) 6
8. (iii) कविताओं के काव्य–सौंदर्य पर दो प्रश्न (3+3) 6

गद्य–भागः 20

9. (i) सप्रसंग व्याख्या (दो में से एक) 08
10. (ii) पाठों की विषय वस्तु पर तीन में से दो प्रश्न (3+3) 06
11. (iii) किसी एक कवि/लेखक का साहित्यिक परिचय 06

		पूरक पुस्तक : अंतराल (भाग–2)	15
13.	(i)	विषय वस्तु पर आधारित (चार में से तीन लघूत्तर प्रश्न)	09
14.	(ii)	विषय वस्तु पर आधारित एक निबंधात्मक प्रश्न	06

निर्धारित पुस्तकें:

(i) **अंतरा भाग–2** एन.सी.ई.आर.टी. द्वारा प्रकाशित

(ii) **अंतराल भाग–2** (विविध विधाओ का संकलन) एन.सी.ई.आर.टी. द्वारा प्रकाशित

(iii) **अभिव्यक्ति और माध्यम** एन.सी.ई.आर.टी. द्वारा प्रकाशित

6. Mathematics (Code No 041)

The Syllabus in the subject of Mathematics has undergone changes from time to time in accordance with growth of the subject and emerging needs of the society. Senior Secondary stage is a launching stage from where the students go either for higher academic education in Mathematics or for professional courses like engineering, physical and Bioscience, commerce or computer applications. The present revised syllabus has been designed in accordance with National Curriculum Frame work 2005 and as per guidelines given in Focus Group on Teaching of Mathematics 2005 which is to meet the emerging needs of all categories of students. Motivating the topics from real life situations and other subject areas, greater emphasis has been laid on application of various concepts.

Objectives

The broad objectives of teaching Mathematics at senior school stage intend to help the pupil:

- to acquire knowledge and critical understanding, particularly by way of motivation and visualization, of basic concepts, terms, principles, symbols and mastery of underlying processes and skills.
- to feel the flow of reasons while proving a result or solving a problem.
- to apply the knowledge and skills acquired to solve problems and wherever possible, by more than one method.
- to develop positive attitude to think, analyze and articulate logically.
- to develop interest in the subject by participating in related competitions.
- to acquaint students with different aspects of mathematics used in daily life.
- to develop an interest in students to study mathematics as a discipline.
- to develop awareness of the need for national integration, protection of environment, observance of small family norms, removal of social barriers, elimination of sex biases.
- to develop reverence and respect towards great Mathematicians for their contributions to the field of Mathematics.

COURSE STRUCTURE
Class XI

One Paper **Three Hours** **Max Marks. 100**

Units		Marks
I.	SETS AND FUNCTIONS	29
II.	ALGEBRA	37
III.	COORDINATE GEOMETRY	13
IV.	CALCULUS	06
V.	MATHEMATICAL REASONING	03
VI.	STATISTICS AND PROBABILITY	12
		100

UNIT-I: SETS AND FUNCTIONS

1. Sets : (12) Periods

Sets and their representations. Empty set. Finite & Infinite sets. Equal sets.Subsets. Subsets of the set of real numbers especially intervals (with notations). Power set. Universal set. Venn diagrams. Union and Intersection of sets. Difference of sets. Complement of a set.

2. Relations & Functions: (14) Periods

Ordered pairs, Cartesian product of sets. Number of elements in the cartesian product of two finite sets. Cartesian product of the reals with itself (upto R x R x R). Definition of relation, pictorial diagrams, domain. codomain and range of a relation. Function as a special kind of relation from one set to another. Pictorial representation of a function, domain, co-domain & range of a function. Real valued function of the real variable, domain and range of these functions, constant, identity, polynomial, rational, modulus, signum and greatest integer functions with their graphs. Sum, difference, product and quotients of functions.

3. Trigonometric Functions: (18) Periods

Positive and negative angles. Measuring angles in radians & in degrees and conversion from one measure to another. Definition of trigonometric functions with the help of unit circle. Truth of the identity $\sin^2 x + \cos^2 x = 1$, for all x. Signs of trigonometric functions and sketch of their graphs. Expressing $\sin(x+y)$ and $\cos(x+y)$ in terms of $\sin x$, $\sin y$, $\cos x$ & $\cos y$. Deducing the identities like the following:

$$\tan(x \pm y) = \frac{\tan x \pm \tan y}{1 \mp \tan x \tan y}, \quad \cot(x \pm y) = \frac{\cot x \cot y \mp 1}{\cot y \pm \cot x},$$

$$\sin x + \sin y = 2 \sin\frac{x+y}{2} \cos\frac{x-y}{2}, \quad \cos x + \cos y = 2 \cos\frac{x+y}{2} \cos\frac{x-y}{2},$$

$$\sin x - \sin y = 2 \cos\frac{x+y}{2} \sin\frac{x-y}{2}, \quad \cos x - \cos y = -2 \sin\frac{x+y}{2} \sin\frac{x-y}{2},$$

Identities related to $\sin 2x$, $\cos 2x$, $\tan 2x$, $\sin 3x$, $\cos 3x$ and $\tan 3x$. General solution of trigonometric equations of the type $\sin\theta = \sin\alpha$, $\cos\theta = \cos\alpha$ and $\tan\theta = \tan\alpha$.

UNIT-II: ALGEBRA

1. Principle of Mathematical Induction: (06) Periods

Processes of the proof by induction, motivating the application of the method by looking at natural numbers as the least inductive subset of real numbers. The principle of mathematical induction and simple applications.

2. Complex Numbers and Quadratic Equations: (10) Periods

Need for complex numbers, especially $\sqrt{-1}$, to be motivated by inability to solve every quadratic equation. Brief description of algebraic properties of complex numbers. Argand plane and polar representation of complex numbers. Statement of Fundamental Theorem of Algebra, solution of quadratic equations in the complex number system.

3. **Linear Inequalities:** **(10) Periods**

Linear inequalities. Algebraic solutions of linear inequalities in one variable and their representation on the number line. Graphical solution of linear inequalities in two variables. Solution of system of linear inequalities in two variables- graphically.

4. **Permutations & Combinations:** **(12) Periods**

Fundamental principle of counting. Factorial *n.* (*n!*)Permutations and combinations, derivation of formulae and their connections, simple applications.

5. **Binomial Theorem:** **(08) Periods**

History, statement and proof of the binomial theorem for positive integral indices. Pascal's triangle, General and middle term in binomial expansion, simple applications.

6. **Sequence and Series:** **(10) Periods**

Sequence and Series. Arithmetic progression (A. P.). arithmetic mean (A.M.) Geometric progression (G.P.), general term of a G.P., sum of *n* terms of a G.P., geometric mean (G.M.), relation between A.M. and G.M. Sum to *n* terms of the special series Σn, Σn^2 and Σn^3.

UNIT-III: COORDINATE GEOMETRY

1. **Straight Lines:** **(09) Periods**

Brief recall of 2D from earlier classes. Slope of a line and angle between two lines. Various forms of equations of a line: parallel to axes, point-slope form, slope-intercept form, two-point form, intercepts form and normal form. General equation of a line. Distance of a point from a line.

2. **Conic Sections:** **(12) Periods**

Sections of a cone: circle, ellipse, parabola, hyperbola, a point, a straight line and pair of intersecting lines as a degenerated case of a conic section. Standard equations and simple properties of parabola, ellipse and hyperbola. Standard equation of a circle.

3. **Introduction to Three -dimensional Geometry** **(08) Periods**

Coordinate axes and coordinate planes in three dimensions. Coordinates of a point. Distance between two points and section formula.

UNIT-IV: CALCULUS

1. **Limits and Derivatives:** **(18) Periods**

Derivative introduced as rate of change both as that of distance function and geometrically, intuitive idea of limit. Definition of derivative, relate it to slope of tangent of the curve, derivative of sum, difference, product and quotient of functions. Derivatives of polynomial and trigonometric functions.

UNIT-V: MATHEMATICAL REASONING

1. Mathematical Reasoning: (08) Periods

Mathematically acceptable statements. Connecting words/ phrases - consolidating the understanding of "if and only if (necessary and sufficient) condition", "implies", "and/or", "implied by", "and", "or", "there exists" and their use through variety of examples related to real life and Mathematics. Validating the statements involving the connecting words- difference between contradiction, converse and contrapositive.

UNIT-VI: STATISTICS & PROBABILITY

1. Statistics: (10) Periods

Measure of dispersion; mean deviation, variance and standard deviation of ungrouped/grouped data. Analysis of frequency distributions with equal means but different variances.

2. Probability: (10) Periods

Random experiments: outcomes, sample spaces (set representation). Events: occurrence of events, 'not', 'and' and 'or' events, exhaustive events, mutually exclusive events Axiomatic (set theoretic) probability, connections with the theories of earlier classes. Probability of an event, probability of 'not', 'and' & 'or' events.

CLASS XII

One Paper **Three Hours** **Marks: 100**

Units		Marks
I.	RELATIONS AND FUNCTIONS	10
II.	ALGEBRA	13
III.	CALCULUS	44
IV.	VECTORS AND THREE - DIMENSIONAL GEOMETRY	17
V.	LINEAR PROGRAMMING	06
VI.	PROBABILITY	10
	Total	**100**

UNIT I. RELATIONS AND FUNCTIONS

1. Relations and Functions : **(10) Periods**

Types of relations: reflexive, symmetric, transitive and equivalence relations. One to one and onto functions, composite functions, inverse of a function. Binary operations.

2. Inverse Trigonometric Functions: **(12) Periods**

Definition, range, domain, principal value branches. Graphs of inverse trigonometric functions. Elementary properties of inverse trigonometric functions.

UNIT-II: ALGEBRA

1. Matrices: **(18) Periods**

Concept, notation, order, equality, types of matrices, zero matrix, transpose of a matrix, symmetric and skew symmetric matrices. Addition, multiplication and scalar multiplication of matrices, simple properties of addition, multiplication and scalar multiplication. Non-commutativity of multiplication of matrices and existence of non-zero matrices whose product is the zero matrix (restrict to square matrices of order 2). Concept of elementary row and column operations. Invertible matrices and proof of the uniqueness of inverse, if it exists; (Here all matrices will have real entries).

2. Determinants: **(20) Periods**

Determinant of a square matrix (up to 3 x 3 matrices), properties of determinants, minors, cofactors and applications of determinants in finding the area of a triangle. Adjoint and inverse of a square matrix. Consistency, inconsistency and number of solutions of system of linear equations by examples, solving system of linear equations in two or three variables (having unique solution) using inverse of a matrix.

UNIT-III: CALCULUS

1. Continuity and Differentiability: (18) Periods

Continuity and differentiability, derivative of composite functions, chain rule, derivatives of inverse trigonometric functions, derivative of implicit function.Concept of exponential and logarithmic functions and their derivative. Logarithmic differentiation. Derivative of functions expressed in parametric forms. Second order derivatives. Rolle's and Lagrange's Mean Value Theorems (without proof) and their geometric interpretations.

2. Applications of Derivatives: (10) Periods

Applications of derivatives: rate of change, increasing/decreasing functions, tangents & normals, approximation, maxima and minima (first derivative test motivated geometrically and second derivative test given as a provable tool). Simple problems (that illustrate basic principles and understanding of the subject as well as real-life situations).

3. Integrals: (20) Periods

Integration as inverse process of differentiation. Integration of a variaty of functions by substitution, by partial fractions and by parts, only simple integrals of the type

$$\int \frac{dx}{x^2 \pm a^2}, \int \frac{dx}{\sqrt{x^2 \pm a^2}}, \int \frac{dx}{\sqrt{a^2 - x^2}}, \int \frac{dx}{ax^2 + bx^2 + c}, \int \frac{dx}{\sqrt{ax^2 + bx + c}}$$

$$\int \frac{(px + q)}{ax^2 + bx + c} dx, \int \frac{(px + q)}{\sqrt{ax^2 + bx + c}} dx, \int \sqrt{a^2 \pm x^2}\, dx \text{ and } \int \sqrt{x^2 - a^2}\, dx$$

to be evaluated.

Definite integrals as a limit of a sum, Fundamental Theorem of Calculus (without proof). Basic properties of definite integrals and evaluation of definite integrals.

4. Applications of the Integrals: (10) Periods

Applications in finding the area under simple curves, especially lines, areas of circles/ parabolas/ellipses (in standard form only), area between the two above said curves (the region should be clearly identifiable).

5. Differential Equations: (10) Periods

Definition, order and degree, general and particular solutions of a differential equation. Formation of differential equation whose general solution is given. Solution of differential equations by method of separation of variables, homogeneous differential equations of first order and first degree. Solutions of linear differential equation of the type:

$\frac{dy}{dx} + py = q$, where p and q are functions of x.

UNIT-IV: VECTORS AND THREE-DIMENSIONAL GEOMETRY

1. Vectors: (12) Periods

Vectors and scalars, magnitude and direction of a vector. Direction cosines/ratios of vectors. Types of vectors (equal, unit, zero, parallel and collinear vectors), position vector of a point, negative of a vector, components of a vector, addition of vectors, multiplication of a vector by a scalar, position vector of a point dividing a line segment in a given ratio. Scalar (dot) product of vectors, projection of a vector on a line. Vector (cross) product of vectors.

2. Three - dimensional Geometry: (12) Periods

Direction cosines/ratios of a line joining two points. Cartesian and vector equation of a line, coplanar and skew lines, shortest distance between two lines. Cartesian and vector equation of a plane. Angle between (i) two lines, (ii) two planes. (iii) a line and a plane. Distance of a point from a plane.

UNIT-V: LINEAR PROGRAMMING

1. Linear Programming: (12) Periods

Introduction, definition of related terminology such as constraints, objective function, optimization, different types of linear programming (L.P.) problems, mathematical formulation of L.P. problems, graphical method of solution for problems in two variables, feasible and infeasible regions, feasible and infeasible solutions, optimal feasible solutions (up to three non-trivial constraints).

UNIT-VI: PROBABILITY

1. Probability: (18) Periods

Multiplication theorem on probability. Conditional probability, independent events, total probability, Baye's theorem, Random variable and its probability distribution, mean and variance of haphazard variable. Repeated independent (Bernoulli) trials and Binomial distribution.

7. PHYSICS (Code No. 042)

Senior Secondary stage of school education is a stage of transition from general education to discipline-based focus on curriculum. The present updated syllabus keeps in view the rigour and depth of disciplinary approach as well as the comprehension level of learners. Due care has also been taken that the syllabus is not heavy and is at the same time, comparable to the international standards. Salient features of the syllabus include:

- Emphasis on basic conceptual understanding of the content.
- Emphasis on use of SI units, symbols, nomenclature of physical quantities and formulations as per international standards.
- Providing logical sequencing of units of the subject matter and proper placement of concepts with their linkage for better learning.
- Reducing the curriculum load by eliminating overlapping of concepts/ content within the discipline and other disciplines.
- Promotion of process-skills, problem-solving abilities and applications of Physics concepts.

Besides, the syllabus also attempts to

- strengthen the concepts developed at the secondary stage to provide firm foundation for further learning in the subject.
- expose the learners to different processes used in Physics-related industrial and technological applications.
- develop process-skills and experimental, observational, manipulative, decision making and investigatory skills in the learners.
- promote problem solving abilities and creative thinking in learners.
- develop conceptual competence in the learners and make them realize and appreciate the interface of Physics with other disciplines.

COURSE STRUCTURE

Class XI (Theory)

One Paper **Three Hours** **Max Marks: 70**

	Class XI	Weightage
Unit I	Physical World & Measurement	03
Unit II	Kinematics	10
Unit III	Laws of Motion	10
Unit IV	Work, Energy & Power	06
Unit V	Motion of System of particles & Rigid Body	06
Unit VI	Gravitation	05
Unit VII	Properties of Bulk Matter	10
Unit VIII	Thermodynamics	05
Unit XI	Behaviour of Perfect Gas & Kinetic Theory of gases	05
Unit X	Oscillations & Waves	10
	Total	**70**

Unit I: Physical World and Measurement (periods 10)

Physics - scope and excitement; nature of physical laws; Physics, technology and society.

Need for measurement: Units of measurement; systems of units; SI units, fundamental and derived units. Length, mass and time measurements; accuracy and precision of measuring instruments; errors in measurement; significant figures.

Dimensions of physical quantities, dimensional analysis and its applications.

Unit II: Kinematics (Periods 30)

Frame of reference. Motion in a straight line: Position-time graph, speed and velocity.

Uniform and non-uniform motion, average speed and instantaneous velocity.

Uniformly accelerated motion, velocity-time, position-time graphs, relations for uniformly accelerated motion (graphical treatment).

Elementary concepts of differentiation and integration for describing motion.

Scalar and vector quantities: Position and displacement vectors, general vectors and notation, equality of vectors, multiplication of vectors by a real number; addition and subtraction of vectors. Relative velocity.

Unit vector; Resolution of a vector in a plane - rectangular components. Motion in a plane. Cases of uniform velocity and uniform acceleration-projectile motion. Uniform circular motion.

Unit III: Laws of Motion (Periods 16)

Intuitive concept of force. Inertia, Newton's first law of motion; momentum and Newton's second law of motion; impulse; Newton's third law of motion. Law of conservation of linear momentum and its applications.

Equilibrium of concurrent forces. Static and kinetic friction, laws of friction, rolling friction.

Dynamics of uniform circular motion: Centripetal force, examples of circular motion (vehicle on level circular road, vehicle on banked road).

Unit IV: Work, Energy and Power (Periods 16)

Scalar product of vectors. Work done by a constant force and a variable force; kinetic energy, work-energy theorem, power.

Notion of potential energy, potential energy of a spring, conservative forces: conservation of mechanical energy (kinetic and potential energies); non-conservative forces: elastic and inelastic collisions in one and two dimensions.

Unit V: Motion of System of Particles and Rigid Body (Periods 18)

Centre of mass of a two-particle system, momentum conversation and centre of mass motion. Centre of mass of a rigid body; centre of mass of uniform rod.

Vector product of vectors; moment of a force, torque, angular momentum, conservation of angular momentum with some examples.

Equilibrium of rigid bodies, rigid body rotation and equations of rotational motion, comparison of linear and rotational motions; moment of inertia, radius of gyration.

Values of moments of inertia for simple geometrical objects (no derivation). Statement of parallel and perpendicular axes theorems and their applications.

Unit VI: Gravitation (Periods 14)

Keplar's laws of planetary motion. The universal law of gravitation.

Acceleration due to gravity and its variation with altitude and depth.

Gravitational potential energy; gravitational potential. Escape velocity. Orbital velocity of a satellite. Geo-stationary satellites.

Unit VII: Properties of Bulk Matter (Periods 28)

Elastic behaviour, Stress-strain relationship, Hooke's law, Young's modulus, bulk modulus, shear, modulus of rigidity.

Pressure due to a fluid column; Pascal's law and its applications (hydraulic lift and hydraulic brakes). Effect of gravity on fluid pressure.

Viscosity, Stokes' law, terminal velocity, Reynold's number, streamline and turbulent flow. Bernoulli's theorem and its applications.

Surface energy and surface tension, angle of contact, application of surface tension ideas to drops, bubbles and capillary rise.

Heat, temperature, thermal expansion; specific heat - calorimetry; change of state - latent heat.

Heat transfer-conduction, convection and radiation, thermal conductivity, Newton's law of cooling.

Unit VIII: Thermodynamics (Periods 12)

Thermal equilibrium and definition of temperature (zeroth law of thermodynamics). Heat, work and internal energy. First law of thermodynamics.

Second law of thermodynamics: reversible and irreversible processes. Heat engines and refrigerators.

Unit IX: Behaviour of Perfect Gas and Kinetic Theory (Periods 8)

Equation of state of a perfect gas, work done on compressing a gas.

Kinetic theory of gases - assumptions, concept of pressure. Kinetic energy and temperature; rms speed of gas molecules; degrees of freedom, law of equipartition of energy (statement only) and application to specific heats of gases; concept of mean free path, Avogadro's number.

Unit X: Oscillations and Waves (Periods 28)

Periodic motion - period, frequency, displacement as a function of time. Periodic functions. Simple harmonic motion (S.H.M) and its equation; phase; oscillations of a spring–restoring force and force constant; energy in S.H.M.-kinetic and potential energies; simple pendulum–derivation of expression for its time period; free, forced and damped oscillations (qualitative ideas only), resonance.

Wave motion. Longitudinal and transverse waves, speed of wave motion. Displacement relation for a progressive wave. Principle of superposition of waves, reflection of waves, standing waves in strings and organ pipes, fundamental mode and harmonics, Beats, Doppler effect.

Practicals

Note: Every student will perform 10 experiments (5 from each section) and 8 activities (4 from each section) during the academic year.

Two demonstration experiments must be performed by the teacher with participation of students. The students will maintain a record of these demonstration experiments. Schools are advised to see the guidelines for evaluation in practicals for Class XII. Similar pattern may the followed for Class XI.

SECTION A

Experiments

1. Use of Vernier Callipers
   (i) to measure diameter of a small spherical/cylindrical body.
   (ii) to measure dimensions of a given regular body of known mass and hence find its density.
   (iii) to measure internal diameter and depth of a given beaker/calorimeter and hence find its volume.
2. Use of screw gauge
   (i) to measure diameter of a given wire, (ii) to measure thickness of a given sheet (iii) to measure volume of an irregular lamina
3. To determine radius of curvature of a given spherical surface by a spherometer.
4. To find the weight of a given body using parallelogram law of vectors.
5. Using a simple pendulum, plot L-T and L-T^2 graphs. Hence find the effective length of second's pendulum using appropriate graph.
6. To study the relationship between force of limiting friction and normal reaction and to find co-efficient of friction between a block and a horizontal surface.
7. To find the downward force, along an inclined plane, acting on a roller due to gravitational pull of the earth and study its relationship with the angle of inclination by plotting graph between force and $\sin\theta$.

Activities

1. To make a paper scale of given least count, e.g. 0.2cm, 0.5cm.
2. To determine mass of a given body using a metre scale by principle of moments.
3. To plot a graph for a given set of data, with proper choice of scales and error bars.
4. To measure the force of limiting friction for rolling of a roller on a horizontal plane.
5. To study the variation in range of a jet of water with angle of projection.
6. To study the conservation of energy of a ball rolling down on inclined plane (using a double inclined plane).
7. To study dissipation of energy of a simple pendulum by plotting a graph between square of amplitude and time.

SECTION B

Experiments

1. To determine Young's modulus of elasticity of the material of a given wire.
2. To find the force constant of a helical spring by plotting graph between load and extension.

3. To study the variation in volume with pressure for a sample of air at constant temperature by plotting graphs between P and V, and between P and I/V.
4. To determine the surface tension of water by capillary rise method.
5. To determine the coefficient of viscosity of a given viscous liquid by measuring terminal velocity of a given spherical body.
6. To study the relationship between the temperature of a hot body and time by plotting a cooling curve.
7. (i) To study the relation between frequency and length of a given wire under constant tension using sonometer.
   (ii) To study the relation between the length of a given wire and tension for constant frequency using sonometer.
8. To find the speed of sound in air at room temperature using a resonance tube by two-resonance positions.
9. To determine specific heat of a given (i) solid (ii) liquid, by method of mixtures.

Activities

1. To observe change of state and plot a cooling curve for molten wax.
2. To observe and explain the effect of heating on a bi-metallic strip.
3. To note the change in level of liquid in a container on heating and interpret the observations.
4. To study the effect of detergent on surface tension by observing capillary rise.
5. To study the factors affecting the rate of loss of heat of a liquid.
6. To study the effect of load on depression of a suitably clamped metre scale loaded (i) at its end (ii) in the middle.

Class XII (Theory)

One Paper	**Time: 3 Hours**	**70 Marks**
Unit I	Electrostatics	08
Unit II	Current Electricity	07
Unit III	Magnetic effect of current & Magnetism	08
Unit IV	Electromagnetic Induction and Alternating current	08
Unit V	Electromagnetic Waves	03
Unit VI	Optics	14
Unit VII	Dual Nature of Matter	04
Unit VIII	Atoms and Nuclei	06
Unit IX	Electronic Devices	07
Unit X	Communication Systems	05
	Total	**70**

Unit I: Electrostatics (Periods 25)

Electric Charges; Conservation of charge, Coulomb's law-force between two point charges, forces between multiple charges; superposition principle and continuous charge distribution.

Electric field, electric field due to a point charge, electric field lines; electric dipole, electric field due to a dipole; torque on a dipole in uniform electric field.

Electric flux, statement of Gauss's theorem and its applications to find field due to infinitely long straight wire, uniformly charged infinite plane sheet and uniformly charged thin spherical shell (field inside and outside).

Electric potential, potential difference, electric potential due to a point charge, a dipole and system of charges; equipotential surfaces, electrical potential energy of a system of two point charges and of electric dipole in an electrostatic field.

Conductors and insulators, free charges and bound charges inside a conductor. Dielectrics and electric polarisation, capacitors and capacitance, combination of capacitors in series and in parallel, capacitance of a parallel plate capacitor with and without dielectric medium between the plates, energy stored in a capacitor. Van de Graaff generator.

Unit II: Current Electricity (Periods 22)

Electric current, flow of electric charges in a metallic conductor, drift velocity, mobility and their relation with electric current; Ohm's law, electrical resistance, V-I characteristics (linear and non-linear), electrical energy and power, electrical resistivity and conductivity. Carbon resistors, colour code for carbon resistors; series and parallel combinations of resistors; temperature dependence of resistance.

Internal resistance of a cell, potential difference and emf of a cell, combination of cells in series and in parallel.

Kirchhoff's laws and simple applications. Wheatstone bridge, metre bridge.

Potentiometer - principle and its applications to measure potential difference and for comparing emf of two cells; measurement of internal resistance of a cell.

Unit III: Magnetic Effects of Current and Magnetism (Periods 25)

Concept of magnetic field, Oersted's experiment.

Biot - Savart law and its application to current carrying circular loop.

Ampere's law and its applications to infinitely long straight wire, straight and toroidal solenoids.

Force on a moving charge in uniform magnetic and electric fields. Cyclotron.

Force on a current-carrying conductor in a uniform magnetic field. Force between two parallel current-carrying conductors-definition of ampere. Torque experienced by a current loop in uniform magnetic field; moving coil galvanometer-its current sensitivity and conversion to ammeter and voltmeter.

Current loop as a magnetic dipole and its magnetic dipole moment. Magnetic dipole moment of a revolving electron. Magnetic field intensity due to a magnetic dipole (bar magnet) along its axis and perpendicular to its axis. Torque on a magnetic dipole (bar magnet) in a uniform magnetic field; bar magnet as an equivalent solenoid, magnetic field lines; Earth's magnetic field and magnetic elements. Para-, dia- and ferro - magnetic substances, with examples. Electromagnets and factors affecting their strengths. Permanent magnets.

Unit IV: Electromagnetic Induction and Alternating Currents (Periods 20)

Electromagnetic induction; Faraday's law, induced emf and current; Lenz's Law, Eddy currents. Self and mutual inductance.

Need for displacement current.

Alternating currents, peak and rms value of alternating current/voltage; reactance and impedance; LC oscillations (qualitative treatment only), LCR series circuit, resonance; power in AC circuits, wattless current.

AC generator and transformer.

Unit V: Electromagnetic waves (Periods 4)

Electromagnetic waves and their characteristics (qualitative ideas only). Transverse nature of electromagnetic waves.

Electromagnetic spectrum (radio waves, microwaves, infrared, visible, ultraviolet, X-rays, gamma rays) including elementary facts about their uses.

Unit VI: Optics (Periods 30)

Reflection of light, spherical mirrors, mirror formula. Refraction of light, total internal reflection and its applications, optical fibres, refraction at spherical surfaces, lenses, thin lens formula, lens-maker's formula. Magnification, power of a lens, combination of thin lenses in contact. Refraction and dispersion of light through a prism.

Scattering of light - blue colour of the sky and reddish appearance of the sun at sunrise and sunset.

Optical instruments: Human eye, image formation and accommodation, correction of eye defects (myopia, hypermetropia, presbyopia and astigmatism) using lenses. Microscopes and astronomical telescopes (reflecting and refracting) and their magnifying powers.

Wave optics: wave front and Huygens' principle, reflection and refraction of plane wave at a plane surface using wave fronts. Proof of laws of reflection and refraction using Huygens' principle. Interference, Young's double slit experiment and expression for fringe width, coherent sources and sustained interference of light. Diffraction due to a single slit, width of central maximum. Resolving power of microscopes and astronomical telescopes. Polarisation, plane polarised light; Brewster's law, uses of plane polarised light and Polaroids.

Unit VII: Dual Nature of Matter and Radiation (Periods 8)

Dual nature of radiation. Photoelectric effect, Hertz and Lenard's observations; Einstein's photoelectric equation-particle nature of light.

Matter waves-wave nature of particles, de Broglie relation. Davisson-Germer experiment.

Unit VIII: Atoms & Nuclei (Periods 18)

Alpha-particle scattering experiment; Rutherford's model of atom; Bohr model, energy levels, hydrogen spectrum.

Composition and size of nucleus, atomic masses, isotopes, isobars; isotones. Radioactivity-alpha, beta and gamma particles/rays and their properties; radioactive decay law. Mass-energy relation, mass defect; binding energy per nucleon and its variation with mass number; nuclear fission and fusion.

Unit IX: Electronic Devices (Periods 18)

Semiconductors; semiconductor diode – I-V characteristics in forward and reverse bias, diode as a rectifier; I-V characteristics of LED, photodiode, solar cell, and Zener diode; Zener diode as a voltage regulator. Junction transistor, transistor action, characteristics of a transistor; transistor as an amplifier (common emitter configuration) and oscillator. Logic gates (OR, AND, NOT, NAND and NOR). Transistor as a switch.

Unit X: Communication Systems (Periods 10)

Elements of a communication system (block diagram only); bandwidth of signals (speech, TV and digital data); bandwidth of transmission medium. Propagation of electromagnetic waves in the atmosphere, sky and space wave propagation. Need for modulation. Production and detection of an amplitude-modulated wave.

Practicals

Every student will perform 10 experiments (5 from each section) & 8 activities (4 from each section) during the academic year. Two demonstration experiments must be performed by the teacher with participation of students. The students will maintain a record of these demonstration experiments.

B. Evaluation Scheme for Practical Examination:

• One experiment from any one section		8 Marks
• Two activities (one from each section)	(4+4)	8 Marks
• Practical record (experiments & activities)		6 Marks
• Record of demonstration experiments & Viva based on these experiments		3 Marks
• Viva on experiments & activities		5 Marks
Total		**30 Marks**

SECTION A

Experiments

1. To determine resistance per cm of a given wire by plotting a graph of potential difference versus current.
2. To find resistance of a given wire using metre bridge and hence determine the specific resistance of its material.
3. To verify the laws of combination (series/parallel) of resistances using a metre bridge.
4. To compare the emf of two given primary cells using potentiometer.
5. To determine the internal resistance of given primary cell using potentiometer.
6. To determine resistance of a galvanometer by half-deflection method and to find its figure of merit.
7. To convert the given galvanometer (of known resistance and figure of merit) into an ammeter and voltmeter of desired range and to verify the same.
8. To find the frequency of the a.c. mains with a sonometer.

Activities

1. To measure the resistance and impedance of an inductor with or without iron core.
2. To measure resistance, voltage (AC/DC), current (AC) and check continuity of a given circuit using multimeter.
3. To assemble a household circuit comprising three bulbs, three (on/off) switches, a fuse and a power source.
4. To assemble the components of a given electrical circuit.
5. To study the variation in potential drop with length of a wire for a steady current.
6. To draw the diagram of a given open circuit comprising at least a battery, resistor/rheostat, key, ammeter and voltmeter. Mark the components that are not connected in proper order and correct the circuit and also the circuit diagram.

SECTION B

Experiments

1. To find the value of v for different values of u in case of a concave mirror and to find the focal length.
2. To find the focal length of a convex lens by plotting graphs between u and v or between l/u and l/v.
3. To find the focal length of a convex mirror, using a convex lens.
4. To find the focal length of a concave lens, using a convex lens.
5. To determine angle of minimum deviation for a given prism by plotting a graph between angle of incidence and angle of deviation.

6. To determine refractive index of a glass slab using a travelling microscope.
7. To find refractive index of a liquid by using (i) concave mirror, (ii) convex lens and plane mirror.
8. To draw the I-V characteristic curve of a p-n junction in forward bias and reverse bias.
9. To draw the characteristic curve of a zener diode and to determine its reverse break down voltage.
10. To study the characteristics of a common - emitter npn or pnp transistor and to find out the values of current and voltage gains.

Activities

1. To study effect of intensity of light (by varying distance of the source) on an L.D.R.
2. To identify a diode, an LED, a transistor, and IC, a resistor and a capacitor from mixed collection of such items.
3. Use of multimeter to (i) identify base of transistor. (ii) distinguish between npn and pnp type transistors. (iii) see the unidirectional flow of current in case of a diode and an LED. (iv) check whether a given electronic component (e.g. diode, transistor or I C) is in working order.
4. To observe refraction and lateral deviation of a beam of light incident obliquely on a glass slab.
5. To observe polarization of light using two Polaroids.
6. To observe diffraction of light due to a thin slit.
7. To study the nature and size of the image formed by (i) convex lens (ii) concave mirror, on a screen by using a candle and a screen (for different distances of the candle from the lens/mirror).
8. To obtain a lens combination with the specified focal length by using two lenses from the given set of lenses.

8. CHEMISTRY (Code No. 043)

Rationale

Higher Secondary is the most crucial stage of school education because at this juncture specialized discipline based, content-oriented courses are introduced. Students reach this stage after 10 years of general education and opt for Chemistry with a purpose of pursuing their career in basic sciences or professional courses like medicine, engineering, technology and study courses in applied areas of science and technology at tertiary level. Therefore, there is a need to provide learners with sufficient conceptual background of Chemistry, which will make them competent to meet the challenges of academic and professional courses after the higher secondary stage.

The new and updated curriculum is based on disciplinary approach with rigour and depth taking care that the syllabus is not heavy and at the same time it is comparable to the international level. The knowledge related to the subject of Chemistry has undergone tremendous changes during the past one decade. Many new areas like synthetic materials, bio-molecules, natural resources, industrial chemistry are coming in a big way and deserve to be an integral part of chemistry syllabus at senior secondary stage At international level, new formulations and nomenclature of elements and compounds, symbols and units of physical quantities floated by scientific bodies like IUPAC and CGPM are of immense importance and need to be incorporated in the updated syllabus. The revised syllabus takes care of all these aspects. Greater emphasis has been laid on use of new nomenclature, symbols and formulations, teaching of fundamental concepts, applications of concepts in chemistry to industry/ technology, logical sequencing of units, removal of obsolete content and repetition etc.

OBJECTIVES

The broad objectives of teaching Chemistry at Senior Secondary Stage are to help the learners:

- to promote understanding of basic facts and concepts in chemistry while retaining the excitement of chemistry.
- to make students capable of studying chemistry in academic and professional courses (such as medicine, engineering, technology) at tertiary level.
- to expose the students to various emerging new areas of chemistry and apprise them with their relevance in their future studies and their application in various spheres of chemical sciences and technology.
- to equip students to face various changes related to health, nutrition, environment, population, weather, industries and agriculture.
- to develop problem solving skills in students.
- to expose the students to different processes used in industries and their technological applications.

- to apprise students with interface of chemistry with other disciplines of science such as physics, biology, geology, engineering etc.
- to acquaint students with different aspects of chemistry used in daily life.
- to develop an interest in students to study chemistry as a discipline.

COURSE STRUCTURE

Class XI (Theory)

One Paper **Time: 3 Hours** **70 marks**

Unit No.	Title	Marks
Unit I	Some Basic concepts of chemistry	3
Unit II	Structure of Atom	6
Unit III	Classification of Elements and Periodicity in Properties	4
Unit IV	Chemical Bonding and molecular Structure	5
Unit V	States of Matter: Gases and Liquids	4
Unit VI	Thermodynamics	6
Unit VII	Equilibrium	6
Unit VIII	Redox Reactions	3
Unit IX	Hydrogen	3
Unit X	S-Block Elements	5
Unit XI	Some P-Block Elements	7
Unit XII	Organic Chemistry: some basic Principles and Techniques	7
Unit XIII	Hydrocarbons	8
Unit XIV	Environmental Chemistry	3
	Total	**70**

Unit: Some Basic Concepts of Chemistry (Periods 14)

General Introduction: Importance and scope of chemistry.

Historical approach to particulate nature of matter, laws of chemical combination. Dalton's atomic theory: concept of elements, atoms and molecules.

Atomic and molecular masses. Mole concept and molar mass: percentage composition, empirical and molecular formula; chemical reactions, stoichiometry and calculations based on stoichiometry.

Unit II: Structure of Atom (Periods 16)

Discovery of electron, proton and neutron; atomic number, isotopes and isobars. Thomson's model and its limitations, Rutherford's model and its limitations. Bohr's model and its limitations, concept of shells and subshells, dual nature of matter and light, De Broglie's relationship, Heisenberg uncertainty principle, concept of orbitals, quantum numbers, shapes of s, p, and d orbitals, rules for filling electrons in orbitals - Aufbau principle, Pauli exclusion principle and Hund's rule, electronic configuration of atoms, stability of half filled and completely filled orbitals.

Unit III: Classification of Elements and Periodicity in Properties (Periods 8)

Significance of classification, brief history of the development of periodic table, modern periodic law and the present form of periodic table, periodic trends in properties of elements -atomic radii, ionic radii. Ionization enthalpy, electron gain enthalpy, electro negativity, valence.

Unit IV: Chemical Bonding and Molecular Structure (Periods 16)

Valence electrons, ionic bond, covalent bond: bond parameters. Lewis structure, polar character of covalent bond, covalent character of ionic bond, valence bond theory, resonance, geometry of covalent molecules, VSEPR theory, concept of hybridization, involving s, p and d orbitals and shapes of some simple molecules, molecular orbital; theory of homo nuclear diatomic molecules (qualitative idea only), hydrogen bond.

Unit V: States of Matter: Gases and Liquids (Periods 14)

Three states of matter. Intermolecular interactions, type of bonding, melting and boiling points. Role of gas laws in elucidating the concept of the molecule, Boyle's law. Charles law, Gay Lussac's law, Avogadro's law. Ideal behaviour, empirical derivation of gas equation, Avogadro's number. Ideal gas equation. Derivation from ideal behaviour, liquefaction of gases, critical temperature.

Liquid State - Vapour pressure, viscosity and surface tension (qualitative idea only, no mathematical derivations).

Unit VI: Thermodynamics (Periods16)

Concepts Of System, types of systems, surroundings. Work, heat, energy, extensive and intensive properties, state functions.

First law of thermodynamics - internal energy and enthalpy, heat capacity and specific heat, measurement of ΔU and ΔH, Hess's law of constant heat summation, enthalpy of: bond dissociation, combustion, formation, atomization, sublimation. Phase transformation, ionization, and solution.

Introduction of entropy as a state function, free energy change for spontaneous and non-spontaneous processes, criteria for equilibrium.

Unit VII: Equilibrium (Periods 16)

Equilibrium in physical and chemical processes, dynamic nature of equilibrium, law of mass action, equilibrium constant, factors affecting equilibrium - Le Chatelier's principle; ionic equilibrium - ionization of acids and bases, strong and weak electrolytes, degree of ionization, concept of pH. Hydrolysis of salts (elementary idea). Buffer solutions, solubility product, common ion effect (with illustrative examples).

Unit VIII: Redox Reactions (Periods 6)

Concept of oxidation and reduction, redox reactions, oxidation number, balancing redox reactions, applications of redox reactions.

Unit IX : Hydrogen (Periods 8)

Position of hydrogen in periodic table, occurrence, isotopes, preparation, properties and uses of hydrogen; hydrides - ionic, covalent and interstitial; physical and chemical properties of water, heavy water; hydrogen peroxide-preparation, properties and structure; hydrogen as a fuel.

Unit X: s-Block Elements (Alkali and Alkaline earth metals) (Periods 14)

Group 1 and Group 2 elements:

General introduction, electronic configuration, occurrence, anomalous properties of the first element of each group, diagonal relationship, trends in the variation of properties (such as ionization enthalpy, atomic and ionic radii), trends in chemical reactivity with oxygen, water, hydrogen and halogens; uses.

Preparation and properties of some important compounds:

Sodium carbonate, sodium chloride, sodium hydroxide and sodium hydrogen carbonate, biological importance of sodium and potassium.

CaO, $CaCO_3$ and industrial use of lime and limestone, biological importance of Mg and Ca

Unit XI: Some p-Block Elements (Periods 16)

General Introduction to p-Block Elements

Group 13 elements: General introduction, electronic configuration, occurrence. Variation of properties, oxidation states, trends in chemical reactivity, anomalous properties of first element of the group; Boron- physical and chemical properties, some important compounds: borax, boric acids, boron hydrides. Aluminium: uses, reactions with acids and alkalies.

Group 14 elements: General introduction, electronic configuration, occurrence, variation of properties, oxidation states, trends in chemical reactivity, anomalous behaviour of first element, Carbon - catenation, allotropic forms, physical and chemical properties; uses of some important compounds: oxides.

Important compounds of silicon and a few uses: silicon tetrachloride, silicones, silicates and zeolites.

Unit XII: Organic Chemistry - Some Basic Principles and Techniques (Periods 14)

General introduction, methods of qualitative and quantitative analysis, classification and IUPAC nomenclature of organic compounds

Electronic displacements in a covalent bond: inductive effect, electromeric effect, resonance and hyper conjugation.

Homolytic and heterolytic fission of a covalent bond: free radicals, carbocations, carbanions; electrophiles and nucleophiles, types of organic reactions

Unit XIII: Hydrocarbons (Periods 16)

Classification of hydrocarbons

Alkanes - Nomenclature, isomerism, conformations (ethane only), physical properties, chemical reactions including halogenation, free radical mechanism, combustion and pyrolysis.

Alkenes - Nomenclature, structure of double bond (ethene) geometrical isomerism, physical properties, methods of preparation; chemical reactions: addition of hydrogen, halogen, water, hydrogen halides (Markovnikov's addition and peroxide effect), ozonolysis, oxidation, mechanism of electrophilic addition.

Alkynes - Nomenclature, structure of triple bond (ethyne), physical properties. Methods of preparation, chemical reactions: acidic character of alkynes, addition reaction of - hydrogen, halogens, hydrogen halides and water.

Aromatic hydrocarbons: Introduction, IUPAC nomenclature; Benzene: resonance aromaticity ; chemical properties: mechanism of electrophilic substitution. – nitration sulphonation, halogenation, Friedel Craft's alkylation and acylation: directive influence of functional group in mono-substituted benzene; carcinogenicity and toxicity.

Unit XIV: Environmental Chemistry (Periods 6)

Environmental pollution - air, water and soil pollution, chemical reactions in atmosphere, smog, major atmospheric pollutants; acid rain, ozone and its reactions, effects of depletion of ozone layer, greenhouse effect and global warming - pollution due to industrial wastes; green chemistry as an alternative tool for reducing pollution, strategy for control of environmental pollution.

Practicals

Evaluation Scheme for Examination	Marks
Volumetric Analysis	10
Salt Analysis	6
Content Based Experiment	4
Class Record and Viva	5
Investigatory project	5
Total	**30**

PRACTICALS SYLLABUS Total Periods 60

A. Basic Laboratory Techniques (Periods 2)

1. Cutting glass tube and glass rod
2. Bending a glass tube
3. Drawing out a glass jet
4. Boring a cork

B. Characterization and purification of chemical substances (Periods 6)

1. Determination of melting point of an organic compound
2. Determination of boiling point of an organic compound
3. Crystallization of impure sample of anyone of the following: Alum, copper sulphate, Benzoic acid.

C. Experiments related to pH change (Periods 6)

(a) Anyone of the following experiments:

- Determination of pH of some solutions obtained from fruit juices, varied concentrations of acids. ,bases and salts using pH paper or universal indicator.
- Comparing the pH of solutions of strong and weak acid of same concentration.
- Study the pH change in the titration of a strong base using universal indicator.

b) Study of pH change by common-ion effect in case of weak acids and weak bases.

D. Chemical equilibrium (Periods 4)

One of the following experiments:

(a) Study the shift in equilibrium between ferric ions and thiocyanate ions by increasing/ decreasing the concentration of either ions.

(b) Study the shift in equilibrium between $[Co(H_2O)_6]^{2+}$ and chloride ions by changing the concentration of either of the ions.

E. Quantitative estimation **(Periods 16)**

- Using a chemical balance.
- Preparation of standard solution of oxalic acid.
- Determination of strength of a given solution of sodium hydroxide by titrating it against standard solution of oxalic acid.
- Preparation of standard solution of sodium carbonate.
- Determination of strength of a given solution of hydrochloric acid by titrating it against standard sodium carbonate solution.

F. Qualitative analysis **(Periods 16)**

Determination of one anion and one cation in a given salt

Cations- Pb^{2+}, Cu^{2+}, As^{3+} $A1^{3+}$ Fe^{3+} Mn^{2+}, Ni^{2+}, Zn^{2+}, Co^{2+} Ca^{2+}, Sr^{2+}, Ba^{2+}, Mg^{2+}, NH_4^+

Anions- CO_3^{2-}, S^{2-}, SO_3^{2-}, SO_4^{2-}, NO_2^-, NO_3^-, Cl^-, Br^-, I^- , PO_4^{3-}, $C_2O_4^{2-}$, CH_3COO^-

(Note: Insoluble salts excluded)

G. Detection of nitrogen, sulphur, Chlorine **(Periods 10)**

bromine and iodine in an organic compound.

PROJECT (Periods 10)

Scientific investigations involving laboratory testing and collecting information from other sources.

A Few suggested Projects

- Checking the bacterial contamination in drinking water by testing sulphide ion.
- Study of the methods of purification of water.
- Testing the hardness, presence of iron, fluoride, chloride etc. depending upon the regional variation in drinking water and the study of causes of presences of these ions above permissible limit (if any).
- Investigation of the foaming capacity of different washing soaps and the effect of addition of sodium carbonate on them.
- Study of the acidity of different samples of the tea leaves.
- Determination of the rate of evaporation of different liquids.
- Study of the effect of acids and bases on the tensile strength of fibers.
- Analysis of fruit and vegetable juices for their acidity.

Note: Any other investigatory project, which involves about 10 period of work, can be chosen with the approval of the teacher.

Class XII (Theory)

One Paper **Time: 3 Hours** **70 marks**

Unit No.	Title	Marks
Unit I	Solid State	4
Unit II	Solutions	5
Unit III	Electrochemistry	5
Unit IV	Chemical kinetics	5
Unit V	Surface chemistry	4
Unit VI	General principles and processes of Isolation of Elements	3
Unit VII	p-Block Elements	8
Unit VIII	d- and f- Block Elements	5
Unit IX	Coordination Compounds	3
Unit X	Haloalkanes and Haloarenes	4
Unit XI	Alcohols, Phenols and Ethers	4
Unit XII	Aldehydes, Ketones and Carboxylic acids	6
Unit XIII	Organic Compounds containing Nitrogen	4
Unit XIV	Biomolecules	4
Unit XV	Polymers	3
Unit XVI	Chemistry in Everyday life	3
	Total:	**70**

Unit I: Solid State (Periods 12)

Classification of solids based on different binding forces: molecular, ionic, covalent and metallic solids, amorphous and crystalline solids (elementary idea), unit cell in two dimensional and three dimensional lattices, calculation of density of unit cell, packing in solids, voids, number of atoms per unit cell in a cubic unit cell, point defects, electrical and magnetic properties.

Unit II: Solutions (Periods 12)

Types of solutions, expression of concentration of solutions of solids in liquids, solubility of gases in liquids, solid solutions, colligative properties – relative lowering of vapour pressure, elevation of Boiling Point, depression of freezing point, osmotic pressure, determination of molecular masses using colligative properties, abnormal molecular mass.

Unit III: Electrochemistry (Periods 14)

Redox reactions, conductance in electrolytic solutions, specific and molar conductivity variations of conductivity with concentration, Kohlrausch's Law, electrolysis and laws of electrolysis (elementary idea), dry cell – electrolytic cells and Galvanic cells; lead accumulator, EMF of a cell, standard electrode potential, Nernst equation and its application to chemical cells, fuel cells; corrosion.

Unit IV: Chemical Kinetics (Periods 12)

Rate of a reaction (average and instantaneous), factors affecting rates of reaction; concentration, temperature, catalyst; order and molecularity of a reaction; rate law and specific rate constant, integrated rate equations and half life (only for zero and first order reactions); concept of collision theory (elementary idea, no mathematical treatment)

Unit V: Surface Chemistry (Periods 8)

Adsorption – physisorption and chemisorption; factors affecting adsorption of gases on solids; catalysis : homogenous and heterogeneous, activity and selectivity: enzyme catalysis; colloidal state: distinction between true solutions, colloids and suspensions; lyophilic, lyophobic, multimolecular and macromolecular colloids; properties of colloids; Tyndall effect, Brownian movement, electrophoresis, coagulation; emulsion – types of emulsions.

Unit VI: General Principles and Processes of Isolation of Elements (Periods 8)

Principles and methods of extraction - concentration, oxidation, reduction electrolytic method and refining; occurrence and principles of extraction of aluminium, copper, zinc and Iron.

Unit VII: p-Block Elements (Periods 14)

Group 15 elements: General introduction, electronic configuration, occurrence, oxidation states, trends in physical and chemical properties; nitrogen - preparation, properties and uses; compounds of nitrogen: preparation and properties of ammonia and nitric acid, oxides of nitrogen (structure only); Phosphorous-allotropic forms; compounds .of phosphorous: preparation and properties of phosphine, halides (PCl_3, PCl_5) and oxoacids (elementary idea only)

Group 16 elements: General introduction, electronic configuration, oxidation states, occurrence, trends in physical and chemical properties; dioxygen: preparation, properties and uses; simple oxides; Ozone. Sulphur - allotropic forms; compounds of sulphur: preparation, properties and uses of sulphur dioxide; sulphuric acid: industrial process of manufacture, properties and uses, oxoacids of sulphur (structures only).

Group 17 elements: General introduction, electronic configuration, oxidation states,

occurrence, trends in physical and chemical properties; compounds of halogens: preparation, properties and uses of chlorine and hydrochloric acid, interhalogen compounds, oxoacids of halogens (structures only).

Group 18 elements: General introduction, electronic configuration. Occurrence, trends in physical and chemical properties, uses.

Unit VIII: d and f Block Elements (Period 14)

General introduction ,electronic configuration, occurrence and characteristics of transition metals, general trends in properties of the first row transition metals – metallic character, ionization enthalpy, oxidation states, ionic radii, colour catalytic property, magnetic properties, interstitial compounds, alloy formation. Preparation and properties of $K_2Cr_2O_7$ and $KMnO_4$.

Lanthanoids - electronic configuration, oxidation states, chemical reactivity and lanthanoid contraction.

Actinoids - Electronic configuration, oxidation states.

Unit IX: Coordination Compounds (Period 12)

Coordination compounds - Introduction, ligands, coordination number, colour, magnetic properties and shapes, IUPAC nomenclature of mononuclear coordination compounds. bonding; isomerism, importance of coordination compounds (in qualitative analysis, extraction of metals and biological systems).

Unit X: Haloalkanes and Haloarenes. (Periods 12)

Haloalkanes:
Nomenclature, nature of C-X bond, physical and chemical properties, mechanism of substitution reactions.

Haloarenes:
Nature of C-X bond, substitution reactions (directive influence of halogen for monosubstituted compounds only)

Uses and environmental effects of - dichloromethane, trichloromethane, tetrachloromethane, iodoform, freons, DDT.

Unit XI: Alcohols, Phenols and Ethers (Periods 12)

Alcohols: Nomenclature, methods of preparation, physical and chemical properties (of primary alcohols only); identification of primary, secondary and tertiary alcohols; mechanism of dehydration, uses of methanol and ethanol.

Phenols : Nomenclature, methods of preparation, physical and chemical properties, acidic nature of phenol, electrophillic substitution reactions, uses of phenols.

Ethers: Nomenclature, methods of preparation, physical and chemical properties, uses.

Unit XII: Aldehydes, Ketones and Carboxylic Acids (Periods 12)

Aldehydes and Ketones: Nomenclature, nature of carbonyl group, methods of preparation, physical and chemical properties mechanism of nucleophilic addition, reactivity of alpha hydrogen in aldehydes; uses.

Carboxylic Acids: Nomenclature, acidic nature, methods of preparation, physical and chemical properties; uses.

Unit XIII: Organic compounds containing Nitrogen (Periods 10)

Amines: Nomenclature, classification, structure, methods of preparation, physical and chemical properties, uses, identification of primary, secondary and tertiary amines.

Cyanides and Isocyanides - will be mentioned at relevant places in context.

Diazonium salts: Preparation, chemical reactions and importance in synthetic organic chemistry.

Unit XIV: Biomolecules (Periods 12)

Carbohydrates - Classification (aldoses and ketoses), monosaccahrides (glucose and fructose), oligosaccharides (sucrose, lactose, maltose), polysaccharides (starch, cellulose, glycogen); importance.

Proteins - Elementary idea of α - amino acids, peptide bond, polypeptides proteins, primary structure, secondary structure, tertiary structure and quaternary structure (qualitative idea only), denaturation of proteins; enzymes.

Vitamins -Classification and functions.

Nucleic Acids: DNA & RNA .

Unit XV: Polymers (Periods 8)

Classification - natural and synthetic, methods of polymerization (addition and condensation), copolymerization. Some important polymers: natural and synthetic like polythene, nylon, polyesters, bakelite, rubber.

Unit XVI: Chemistry in Everyday life: (Period 8)

1. **Chemicals in medicines -** analgesics, tranquilizers, antiseptics, disinfectants, antimicrobials, antifertility drugs, antibiotics, antacids, antihistamines.
2. **Chemicals in food -** preservatives, artificial sweetening agents.
3. **Cleansing agents -** soaps and detergents, cleansing action.

Practicals

Evaluation Scheme for Examination	Marks
Volumetric Analysis	10
Salt Analysis	6
Content Based Experiment	4
Class record and viva	5
Investigatory Project	5
Total	**30**

Practicals Syllabus

A. Surface Chemistry. (Periods 6)

(a) Preparation of one lyophilic and one lyophobic sol.

Lyophilic sol - starch, egg albumin and gum

Lyophobic sol - aluminium hydroxide, ferric hydroxide, arsenous sulphide.

(b) Study of the role of emulsifying agents in stabilizing the emulsions of different oils.

B. Chemical Kinetics (Periods 4)

(a) Effect of concentration and temperature on the rate of reaction between sodium thiosulphate and hydrochloric acid.

(b) Study of reaction rates of any one of the following:

(i) Reaction of iodide ion with hydrogen peroxide at room temperature using different concentration of iodide ions.

(ii) Reaction between potassium iodate, KIO_3 and sodium sulphite: (Na_2SO_3) using starch solution as indicator (clock reaction).

C. Thermochemistry (Periods 4)

Any one of the following experiments

i) Enthalpy of dissolution of copper sulphate or potassium nitrate.

ii) Enthalpy of neutralization of strong acid (HC1) and strong base (NaOH)

iii) Determination of enthalpy change during interaction (Hydrogen bond formation) between acetone and chloroform

D. Electrochemistry (Period 2)

Variation of cell potential in $Zn/Zn^{2+}||Cu^{2+}/Cu$ with change in concentration of electrolytes ($CuSO_4$ or $ZnSO_4$) at room temperature.

E. Chromatography (Periods 2)

i) Separation of pigments from extracts of leaves and flowers by paper chromatography and determination of R_f values.

ii) Separation of constituents present in an inorganic mixture containing two cations only (constituents having large difference in R_f values to be provided).

F. Preparation of Inorganic Compounds (Periods 4)

i) Preparation of double salt of ferrous ammonium sulphate or potash alum.

ii) Preparation of potassium ferric oxalate.

G. Preparation of Organic Compounds (Periods 4)

Preparation of any two of the following compounds

i) Acetanilide

ii) Di-benzal acetone

iii) p-Nitroacetanilide.

iv) Aniline yellow or 2 - Napthol aniline dye.

v) Iodoform

H. Tests for the functional groups present in organic compounds: (Periods 6)

Unsaturation, alcoholic, phenolic, aldehydic, ketonic, carboxylic and amino (primary) groups.

I. Characteristic tests of carbohydrates, fats and proteins in pure samples and their detection in given food stuffs. (Periods 4)

J. Determination of concentration/molarity of $KMnO_4$ solution by titrating it against a standard solution of: (Periods 8)

i) Oxalic acid,

ii) Ferrous ammonium sulphate

(Students will be required to prepare standard solutions by weighing themselves).

K. Qualitative analysis (Periods 14)

- Determination of one cation and one anion in a given salt.

Cations - Pb^{2+}, Cu^{2+}, As^{3+}, Al^{3+}, Fe^{3+}, Mn^{2+}, Zn^{2+}, Co^{2+}, Ni^{2+}, Ca^{2+}, Sr^{2+}, Ba^{2+}, Mg^{2+}, NH_4^+

Anions - CO_3^{2-}, S^{2-}, SO_3^{2-}, SO_4^{2-}, NO_2^-, NO_3^-, $C\ell^-$, Br^-, I^-, PO_4^{3-}; $C_2O_4^{2-}$, CH_3COO^-

(Note: Insoluble salts excluded)

PROJECT

Scientific investigations involving laboratory testing and collecting information from other sources.

A few suggested Projects.

- Study of presence of oxalate ions in guava fruit at different stages of ripening.
- Study of quantity of casein present in different samples of milk.
- Preparation of soybean milk and its comparison with the natural milk with respect to curd formation, effect of temperature, etc.
- Study of the effect of potassium bisulphate as food preservative under various conditions (temperature, concentration, time etc.) :
- Study of digestion of starch by salivary amylase and, effect of pH and temperature on it.
- Comparative study of the rate of fermentation of following materials: wheat flour, gram flour, Potato juice, carrot juice etc.
- Extraction of essential oils present in Saunf (aniseed), Ajwain (carum), Illaichi (cardamom).
- Study of common food adulterants in fat, oil, butter, sugar, turmeric powder, chilli powder and pepper.

Note: Any investigatory project, which involves about 10 periods of work, can be chosen with the approval of the teacher.

9. BIOLOGY (Code No. 044)

The present syllabus reinforces the ideas introduced in the lower classes while the students learn new concepts besides getting an exposure to contemporary areas of the subject. The syllabus also aims at emphasizing the underlying principles that are common to both animals and plants as well as highlighting the relationships of biology with other areas of knowledge. The format of the syllabus allows a simple, clear, consequential flow of concepts without any jarring jumps. The syllabus also stresses the connection of the study of Biology to real life problems, use of biological discoveries/innovations in everyday life - in environment, nature, medicine, health and agriculture. The updated syllabus also focuses on reducing the curriculum load while ensuring that ample opportunities and scope for learning and appreciating basic concepts of the subject continues to be available within its framework.

The prescribed syllabus is expected to

- promote understanding of basic principles of biology
- learning of emerging knowledge and its relevance to individual and society
- encourage rational/specific attitude to issues related to population, environment and development
- enhance awareness about environmental issues and problems and the appropriate solutions
- create awareness amongst the learners about variations amongst the living and developing respect for the diversities and to appreciate that the most complex biological phenomenon are also built on essentially simple processes.

It is expected that the students would get an exposure to various branches of Biology in the syllabus in a more contextual and friendly manner as they study its various units.

COURSE STRUCTURE

Class XI (Theory)

One Paper	**Time: 3 Hours**	**70 Marks**
1.	Diversity in living world	07
2.	Structural organization in animals and plants	10
3.	Cell: Structure and function	17
4.	Plant physiology	18
5.	Human Physiology	18
	Total	**70**

I Diversity in Living World (25 Periods)

Diversity of living organisms

Classification of the living organisms (five kingdom classification, major groups and principles of classification within each kingdom).

Systematics and binomial System of nomenclature

Salient features of animal (non chordates up to phylum level and chordates up to class level) and plant (major groups; Angiosperms up to subclass) classification.

Botanical gardens, herbaria, zoological parks and museums.

II Structural Organisation in Animals and Plants (30 Periods)

Tissues in animals and plants.

Morphology, anatomy and functions of different parts of flowering plants: Root, stem, leaf, inflorescence, flower, fruit and seed.

Morphology, anatomy and functions of different systems of an annelid (earthworm), an insect (cockroach) and an amphibian (frog).

III CELL: STRUCTURE AND FUNCTION (40 Periods)

Cell: cell wall, cell membrane and cell organelles' (plastids, mitochondria, endoplasmic reticulum, Golgi bodies/dictyosomes, ribosomes, lysosomes, vacuoles, centrioles) and nuclear organization.

Mitosis, meiosis, cell cycle.
Basic chemical constituents of living bodies.
Structure and functions of carbohydrates, proteins, lipids and nucleic acids.
Enzymes: types, properties and function.

IV Plant Physiology (40 Periods)

Movement of water, food, nutrients and gases, Plants and Water Mineral nutrition, Respiration, Photosynthesis, Plant growth and development.

V Human Physiology (45 Periods)

Digestion and absorption.

Breathing and respiration.

Body fluids and circulation.

Excretory products and elimination.

Locomotion and movement.

Control and coordination.

Practicals

Time: 3 Hours Marks : 30 60 Periods

1.	Experiments and spotting	20 marks
2.	Record of one investigatory project and Viva based on the project	5 marks
3.	Class record and Viva based on experiments	5 marks
		30 marks

A. List of Experiments

1. Study and describe three locally available common flowering plants from each of the following families (Solanaceae, Fabaceae and Liliaceae).
2. Preparation and study of T.S. of dicot and monocot roots and stems (normal).
3. Study of osmosis by potato osmometer.
4. Study of plasmolysis in epidermal peels (e.g. Rhoeo leaves).
5. Study of distribution of stomata in the upper and lower surface of leaves.
6. Comparative study of the rates of transpiration in the upper and lower surface of leaves.
7. Test for the presence of sugar, starch, proteins and fats. To detect them in suitable plant and animal materials.
8. Separate plant pigments through paper chromatography.
9. To study the rate of respiration in flower buds/leaf tissue and germinating seeds.
10. To study effect of different temperatures on the activity of salivary amalyse on starch.
11. To test the presence of urea in urine.
12. To detect the presence of sugar in urine/blood sample.
13. To detect the presence of albumin in urine.
14. To detect the presence of bile salts in urine.

B. Study/observation of the following (spotting)

1. Study parts of a compound microscope.
2. Study of the specimens and identification with reasons-Bacteria, *Oscillatoria,* Spirogyra, Rhizopus, mushroom, Yeast, liverwort, moss, fern, Pine, one monocotyledon and one dicotyledon and one lichen.
3. Study of specimens and identification with reasons-*Amoeba, Hydra, Liverfluke, Ascaris, leech, earthworm, prawn, silkworm, honeybee, snail, starfish, shark, Rohu, frog, lizard, pigeon* and *rabbit*.
4. Study of tissues, and diversity in shapes and sizes of plant and animal cells (e.g. palisade cells, guard cells, parenchyma, collenyma, sclerenchyma, Xylem, Phloem, Squamous epithelium, muscle fibers and mammalian blood smear) through temporary/permanent slides.
5. Study of mitosis in onion root tip cells and animals cells (grasshopper) from permanent slides.
6. Study of different modifications in root, stem and leaves.
7. Study and identify different types of inflorescences.
8. Study of imbibition in seeds/raisins.
9. Observation and comments on the experimental set up on:
   a. Anaerobic respiration

b. Phototropism

c. Apical bud removal

d. Suction due to transpiration

10. To study human skeleton and different types of joints.

11. Study of external morphology of earthworm, cockroach and frog through models.

Class XII

One Paper **Time: 3 Hours** **Marks : 70**

Unit		Marks
1.	Sexual reproduction	12
2.	Genetics and evolution	20
3.	Biology and human Welfare	12
4.	Biotechnology and its applications	12
5.	Ecology and environment	14
	Total	**70**

I SEXUAL REPRODUCTION (35 Periods)

Pollination and fertilization in flowering plants.

Development of seeds and fruits.

Human reproduction: reproductive system in male and female, menstrual cycle. Production of gametes, fertilization, implantation, ,embryo development, pregnancy and parturation.

Reproductive health - birth control, contraception and sexually transmitted diseases.

II Genetics and evolution (45 Periods)

Mendelian inheritance.

Chromosome theory of inheritance, deviations from Mendelian ratio (gene interaction- Incomplete dominance, co-dominance, complementary genes, multiple alleles).

Sex determination in human beings: XX, XY.

Linkage and crossing over.

Inheritance pattern of haemophilia and blood groups in human beings.

DNA: replication, transcription, translation.

Gene expression and regulation.

Genome and Human Genome Project.

DNA fingerprinting.

Evolution: Theories and evidences.

III BIOLOGY AND HUMAN WELFARE (35 Periods)

Animal husbandry.

Basic concepts of immunology, vaccines.

Pathogens, Parasites.

Plant breeding, tissue culture, food production.

Microbes in household food processing, industrial production, sewage treatment and energy generation.

Cancer and AIDS.

Adolescence and drug/alcohol abuse.

IV BIOTECHNOLOGY AND ITS APPLICATIONS (30 Periods)

Recombinant DNA technology.

Applications in Health, Agriculture and Industry

Genetically modified (GM) organisms; biosafety issues.

Insulin and Bt cotton

V ECOLOGY & ENVIRONMENT (35 Periods)

Ecosystems: components, types and energy flow.

Species, population and community.

Ecological adaptations.

Centres of diversity and conservation of biodiversity, National parks and sanctuaries.

Environmental issues.

Practicals

Time: 3 Hours		**60 Periods**
1.	Two experiments	4+4=8 Marks
2.	Slide preparation	5 Marks
3.	Spotting	7 Marks
4.	Investigatory project and Viva based on the project	5 Marks
5.	Record and Viva based on the experiment	5 Marks
		30 Marks

List of Experiments

1. Study pollen germination on a slide.
2. Collect and study soil from different sites and study them for texture and moisture content.

3. Study the pH and water holding capacity of soil. Correlate with the kinds of plants found in them.
4. Collect water from different Water bodies around you and study them for pH, clarity and presence of any living organisms.
5. Study the presence of suspended particulate matter in air at the two widely different sites.
6. Study of plant population density by quadrat method.
7. Study of plant population frequency by quadrat method.
8. Study of mitosis in onion root tip (preparation)

Study/observation of the following (Spotting)

1. Study of flowers adapted to pollination by different agencies (wind, insect)
2. Study of pollen germination on a slide.
3. Study and identify stages of gamete development i.e. T.S. testis and T.S. ovary through permanent slide. (from any mammal)
4. Study meiosis in onion bud cell or grass hopper testis through permanent slide.
5. Study of t.s. of blastula through permanent slide.
6. Study Mendelian inheritance using seeds of different colour/size of any plant.
7. Study prepared pediqree charts of genetic traits such as rolling of tongue, blood groups, widow's peak, colour blindness.
8. Exercise on controlled pollination-Emasculation, tagging and bagging.
9. To identify common diseases causing organism like *Ascaris, Entamoeba, Plasmodium,* ringworm. Comment on symptoms of diseases that they cause through permanent slides or specimens.
10. Study plants and animals found in xerophytic condition. Comment upon their adaptation/ ecosystem.
11. Study plants and animals found in aquatic conditions. Comment upon their adaptation/ ecosystem.
12. Study analogous and homologous organs in various plants and animals.

10. Biotechnology (Code No. 045)

An unprecedented growth of human knowledge in the field of Biological Sciences coupled with equally significant developments in the field of technology have brought significant changes into existing social and economic systems. The emerging field of Biotechnology is likely to further enhance the applications of Science and Technology in the service of human welfare. Modern Biotechnology processes encompass a wide range of new products such as antibiotics, vaccines, monoclonal antibodies and many more. Furthermore, developments in recombinant DNA technology have yielded numerous new useful products in the fields of healthcare and agriculture.

The present syllabus takes care of all these aspects. Due emphasis has been laid on familiarizing the learners with the fundamental concepts, basic techniques and their applications. It is expected that the knowledge gained through the study of different topics and the skills acquired through the prescribed practical work will make the learners competent to meet the challenges of academic as well as professional courses after studying the subect at senior secondary stage.

OBJECTIVES

The broad objectives of teaching Biotechnology at senior secondary level are:

- To help the learners know and understand basic facts and concepts in the subject at elementary stage.
- To expose the students to different basic processes and basic techniques used in Biotechnology
- To farmiliarize the learners to understand the relationship of the subject to health, nutrition, environment, agriculture and industry etc.
- To develop conceptual competence in the learners so as to cope up with professional courses in future career.
- To acquaint students with different applications of Biotechnology in everyday life.
- To develop an interest in students to study biotechnology as a discipline.

Course Structure
Class XI
(Theory)

One Paper (Three Hours) **70 Marks**

Unit I Introduction to Biotechnology **10**

Fundamentals of Biochemical Engineering
Biotechnology and Society

Unit II Biomolecules **20**

Building Blocks of Biomolecules-Structure and dynamics
Structure and function of Macromolecules.
Biochemical Techniques

Unit III Cell and Development 20

The basic unit of life
Cell Growth and development
Cellular Techniques

Unit IV Genetics and Molecular Biology 20

Principles of Genetics
Genome Function
Genetical Techniques

PRACTICALS

Note : Every student is required to do the following experiments during the academic session.

1. Preparation of buffers and pH determination.
2. Sterlization techniques (Wet and Dry Sterlization, Chemical sterlization and Utrafiltration.
3. Media preparation (Solid and Liquid LB medium)
4. Isolation of bacteria from curd and staining of bacteria.
5. Determination of bacterial growth curve.
6. Study of various stages of mitosis and calculation of mitotic index.
7. Preparation of Karyotype.
8. Cell counting (using Haemocytometer)
9. Isolation of genomic DNA.
10. Detection of DNA by gel electrophoresis.
11. Isolation of milk protein (casein)
12. Estimation of protein by Biuret method.
13. Assaying the enzyme acid phosphate.

Scheme of Evaluation:

Time: 3 Hours **Max. Marks 30**

The scheme of evaluation at the end of session will be as under:

Two experiments	:	20 Marks
Viva on experiments	:	5 Marks
Practical record	:	5 Marks

CLASS XII
(THEORY)

One paper **Time: 3Hours** **Total Marks : 70**

Unit V: Protein and Gene Manipulation — Marks 40

Chapter I: Protein Structure and Engineering — 15 Marks

Introduction to the world of Proteins
3-D Shape of Proteins
Structure Function relationship in Proteins
Purification of Proteins
Characterization of Proteins
Protein based products
Designing Proteins
Proteomics

Chapter II: Recombinant DNA Technology — 15 Marks

Introduction
Tools of rDNA Technology
Making Recombinant DNA
DNA Library
Introduction of Recombinant DNA into host cells
Identification of recombinants
Polymerase Chains Reaction (PCR)
DNA Probes
Hybridization Techniques
DNA Sequencing
Site-directed mutagenesis

Chapter III: Genomics and Bioinformatics — 10 Marks

Introduction
Genome Sequencing Projects
Gene Prodiction and counting
Genome similarity, SNP's and comparative genomics
Functional Genomics
History of Bioinformatics
Sequences and Nomenclature
Information Sources
Analysis using Bioinformatics tools.

Unit VI : Cell Culture Technology 30 Marks

Chapter I: Microbial Culture and Applications

Introduction

Microbial Culture Techniques

Measurement and Kinetics of microbial Growth

Scale up of microbial process

Isolation of microbial products

Strain isolation and Improvement

Applications of microbial culture technology

Bioethics in microbial technology

Chapter II: Plant Cell Culture and Applications

Introuction

Cell and Tissue Culture Techniques

Applications of Cell and Tissue Culture

Gene Transfer Methods in Plants

Transgenic Plants with Beneficial Traits

Diagnostics in Agriculture and Molecular Breeding

Bioethics in Plant Genetic Engineering

Chapter III: Animal Cell Culture and Applications **10 Marks**

Introduction

Animal Cell Culture Techniques

Characterisation of Cell Lines

Scale-up of Animal Culture Process

Applicationsof Animal Cell Culture

Stem Cell Technology

Bioethics of Genetic Engineering in Animals

Practicals

Note: Every student will be required to do the following experiments during the academic session

List of Experiments

1. Isolation of bacterial plasmid DNA and its detection by gel eletrophoresis
2. Restriction digestion of plasmid DNA and its analysis by gel electrophoresis
3. Bacterial transformation using any plasmid
4. Data retrival and data base search using internet site NCBI
5. Download a DNA and protein sequence from internet, analyse and comment on it.
6. Cell viability assay (using Evans blue Stain)
7. Determination of blood groups.
8. Estimation of DNA
9. Ion-exchange chromatography for proteins.
10. Reading of a DNA sequencing gel and arrive at the sequence.
11. Estimation of blood glucuse by enzymatic method (GOD/POD)
12. Project work.

Scheme of Evaluation:

Time: 3 Hours **Max. Marks 30**

The scheme of evaluation at the end of the session will be as under:

A.	Two experiments	:	6+6 (only one computer bassed practical)
	Practical record	:	04
	Viva on Practicals	:	04
B.	Project work	:	
	Write up	:	05
	Viva on project	:	05
			Total 30

Recommended Books:

1. **A Textbook of Biotechnology**-Class XI: published by CBSE, New Delhi.
2. **A Laboratory Mannual of Biotechnology-**Class XI:published by CBSE, New Delhi.
3. **A Textbook of Biotechnology-**Class XII: published by CBSE, New Delhi
4. **A Laboratory Mannual of Biotechnology-**ClassXII: published by CBSE, New Delhi.

11. Engineering Drawing (Code No. 046)

The subject of 'Engineering Drawing' has become an indispensable tool for Engineers, Technocrats, Architects, Draftsmen, Surveyors, Designers and many others professionals in the recent times. Understanding of its fundamental principles and wider applications of the same in the above fields and many other daily life situations form the basis for the syllabus at Senior Secondary Stage.

Objectives:

The study of the subject of Engineering Drawing at Senior School Level aims at helping the learner to:

- develop clear concept and perception of form, proportion and purpose.
- develop the skill of expressing three-dimensional and two-dimensional objects into professional language and vice versa.
- acquire the ability to readily draw neat sketches, often needed in "On-job situations".
- develop a clear understanding of plane and solid Geometry and machine drawing so as to apply the same in relevant practical fields such as technology and industry.
- acquire speed and accuracy in use of drawing instruments.

COURSE STRUCTURE

Class XI
(Theory)

One Paper	**3 Hours**	**70 Marks**

Unit		**Marks**
PLANE GEOMETRY		
1.	Construction of lines, angles and rectilnear figures	4
2.	Construction of circles, semi-circles and tangents	6
3.	Construction of ellipse, parabola, involute, cycloid. helix and sine-curve	6
SOLID-GEOMETRY		
4.	Orthographic-projections of points, lines laminae, (plane) and solids	12
5.	Section of solid-figures	15
MACHINE DRAWING		
6.	Orthographic projections of simple machine-blocks	12
7.	Isometric-projection of laminae (plane) figures	10
8.	Development of surfaces	5
	Total Marks	**70**

PLANE GEOMETRY

Unit 1: Construction of lines, angles and their divisions. Simple questions based on triangles, squares, rhombuses, trapeziums, regular polygons-pentagon, hexagon and octagon. **08 Pds.**

Unit 2: Construction of circles, external and internal tangents of circles, inscribing of circles in equilateral triangle, square, rhombus, regular polygons-pentagon, hexagon and octagon. **10Pds.**

Unit 3: (a) Construction of ellipses by the following methods:

(i) Concentric circles

(ii) Intersecting arcs

(iii) Intersecting lines

(b) Construction of Parabola by the following methods:

(i) Intersecting lines

(ii) Intersecting arcs

(c) Construction of involute of a circle.

(d) Construction of cycloid, helix and sine curve **20 Pds.**

SOLID GEOMETRY

Unit 4: Methods of orthographic projections and dimensioning strictly as per SP: 46- 1988 revised conventions. Projection of points, lines, regular plane figure and right regular solids such as cubes, prisms and pyramids (square, triangular, pentagonal and hexagonal), tetrahedrons, cones, cylinders, spheres, hemi-spheres and frustum of solids when they are kept with their axis perpendicular, to HP/VP or parallel to one plane and inclined to the other or parallel to HP and VP both. **40 Pds.**

Unit 5: Section of solids under the same conditions mentioned above made by the horizontal, vertical and inclined planes, also showing true-shape of section. **45 Pds.**

MACHINE DRAWING

Unit 6: Orthographic projections of machine blocks. **40 Pds.**

Unit 7: Construction of Isometric scale showing main divisions of 10 mm and smaller divisions of 1 mm each. Isometric projection(drawn to isometric scale) of figures such as triangles, squares, pentagons, hexagons, circles and semi-circles with their surface parallel to HP or VP and its one side or diagonal or diameter should be either parallel or perpendicular toHP/VP **5Pds**.

Unit 8: Development of the surfaces of following solids:

1. Cube, cuboid, prisms–triangular, square, pentagonal and hexagonal.
2. Pyramids (triangular, square, pentagonal and hexagonal).
3. Right-circular-cylinder and cone **10 Pds.**

Practicals

One paper (Practical) **3 hours** **30 Marks**

1. Developing "Prisms" & "Pyramids" with the help of card board (thick paper).
2. Developing different types of packing boxes (cartons).
3. Making different types of graphics designs/murals for interior/exterior decorations using coloured laminae using the knowledge of circumscribing, inscribing and describing of plane geometrical figures.
4. Drawing ellipse by
   (a)Trammel method

   (b)Thread method

   On ground or drawing-sheets/ply-wood.
5. Preparing top-view (plan) of a

   (a)Class-room

   (b)Drawing-room

   (c)Home

   Showing different objects in it.
6. Drawing through activities:

   (a) Involutes

   (b) Cycloid

   (c) Helix

   (d) Sine-curves and listing their uses in daily life.
7. Preparing the following sections of solids (prisms, pyramids, sphere etc.) with clay, soap,thermocol, plasticine, wax or any other material easily and economically available. When the cutting plane is:

   (i) parallel to the base

   (ii) perpendicular to the base

   (iii) inclined to the base

   (iv) cutting at a given height at a given angle above the base.

   Also making different objects with combination of above solids and their section models.

Note :

I. In all the practicals drawing/sketching of the views should be incorporated and evaluated accordingly.

II. The scheme of evaluation is as follows:

(a)	Practicals(2)	15 Marks
(b)	Drawing/Sketch	05 Marks
(c)	Viva-voce	05 Marks
(d)	Sessional Work	05 Marks
	Total	30 Marks.

CLASS XII
(Theory)

One Paper **3 Hours** **70 Marks**

Unit			**Marks**
I.	Isometric projections of solids		25
II.	Machine Drawing		
	A.	Drawing of Machine parts	15
	B.	Sectional view of assembly of machine parts:	30
		1. Bearings	
		2. Rod joints	
		3. Tie-rod and pipe joints	
		4. Couplings	
		5. Pulleys	
		Total Marks	**70**

Unit I: Isometric projection of solids 50 Pds.

Construction of isometric scale showing main divisions of 10mm and smaler divisions of 1mm, also showing the leading angles. Helping view/s such as triangles, pentagon, hexagon etc. can be drawn using scale 1:1 or isometric scale. *Hidden lines are not required in isometric projection.*

Isometric projections (drawn to isometric scale) of solids such as cube, regular prism and pyramids (triangular, square, pentagonal and hexagonal), cone, cylinder, sphere, hemi-sphere, frustum of right regular pyramids (triangular, square, pentagonal, hexagonal) and cone, when they are cut by a plane parallel to the base. The axis of the solid should be either perpendicular to H.P. or perpendicular to the VP or parallel to HP and VP both. (Indicate the direction of viewing)

Combination of two solids (except "frustum" of Pyramids and Cone) Keeping the base side parallel or perpendicular to H.P./V.P. and placed centrally together, but in no case the common axis of both the solids should be given parallel to H.P.

Note: Question on single solid will be asked in vertical position only.

Unit II: Machine Drawing

A. Drawing of machine parts **36 Pds.**

(i) Drawing to full size scale with instruments. 9 marks

(Internal choice will be given between *ony two* of the following).

Standard profiles of screw threads (square, knuckle, B.S.W. Metric (external and internal) and nomenclature of threads: Bolts (square, Hexagonal, Tee and Hook); Nuts: (square and hexagonal), Plain washer, combination of nut and bolt with or without washer for assembling two parts together, single riveted lap joint with standard dimensions.

(ii) Free-hand sketches 6 marks

(Internal choice will be given between any two of the following) Conventional representation of external and internal threads; studs (plain,plain with square-neck and collar); serews (round-head, cheese-head, 90 flat counterunk-head, hexagonal socket-head and grub-secew; Types of rivets:- snap head, pan head-without tapered neck, flat head and 60° countersunk flat head; Types of sunk-keys (rectangular taper, woodruff and double- head feather key with gib head on both ends).

B. Students are required to attempt either Assembly drawings or Dis-assembly drawings of the following Machine parts). **82 Pds.**

Note:

1. **In all the Assembly drawings, only half sectional front view will be asked and the other half without section. Side/End view or Top View/Plan will be drawn without section, wherever applicable.**
2. **In all the Dis-assembly drawings, only two orthographic views (one of the two views may be half in section or full in section) of any two parts.**
3. **In no view hidden edges or lines are required.**

1. Bearings

(i) Open-Bearing

(ii) Bushed-Bearing

(iii) Footstep-Bearing (only sectional front-view will be asked)

(iv) Simple Plummer-Block (only sectional front view will be asked with only round brasses).

2. Rod-Joints

(i) Cotter-joints for circular-rods (socket and spigot joint)

(ii) Cotter-joints for round-rods (sleeve and cotter joint)

(iii) Cotter-joints for square rods (Gib and cotter-joint)

(iv) Knuckle-joints (only sectional front view will be asked)

3. **Tie-rod and Pipe-joint**

   (i) Turnbuckle

   (ii) Flange pipe joint

4. **Couplings**

   (i) Unprotected Flange Coupling (having socket and spigot arrangement)

   (ii) Protected Flange Coupling

5. **Pulleys**

   (i) Solid cast Iron Pulley (upto 200 mm diameter) having solid web

   (ii) Single groove V-belt pulley (upto 200 mm diameter)

Practicals

One paper (Practical) **3 Hours** **30 Marks, 72 Pds.**

To perform the following jobs from the given views of the prescribed Machine Block (Two).

1. Block-One, by the external examiner.
2. Block-Two, by the internal examiner.

Value-Points

Part 'A'

1.	Copy the given views	1x2=2
2.	Drawing the missing view with hidden lines	1½x2=3
3.	Sketching the Isometric view vithout hidden edges	2½x2=5
4.	To make the machine block of the above in three dimensions. (not to scale but approximately proportionately) drawn with any medium i.e. thermocol, soap-cake, plasticine, clay, wax, orchsis (available with flowerists) etc.	5x2=10

Part 'B'

Viva-voce-questions based on the practicals Performed in Part 'A'	5

Sessional Work:

Solutions of the fifteen prescribed Machine Blocks.	5
Total	**30 Marks**

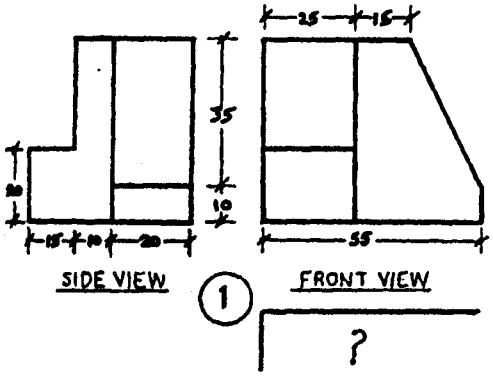
SIDE VIEW
FRONT VIEW
1
?

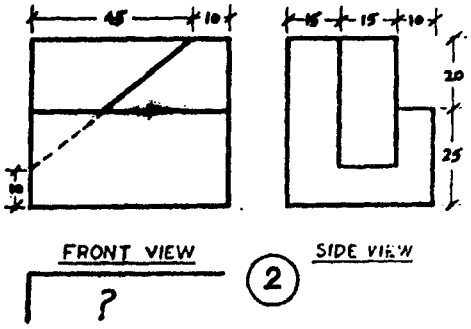
FRONT VIEW
SIDE VIEW
2
?

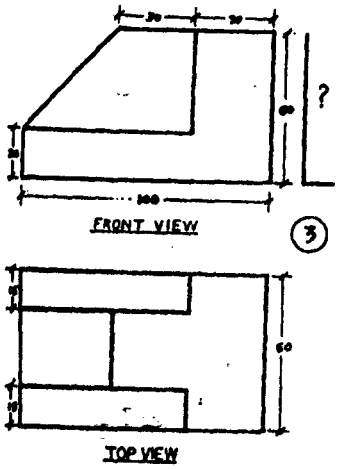
FRONT VIEW
3
TOP VIEW
?

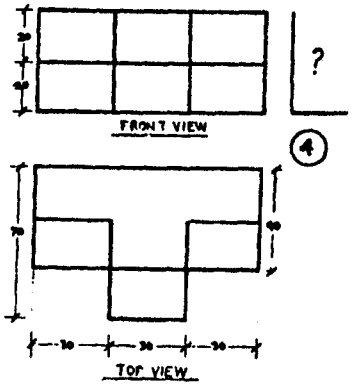
FRONT VIEW
4
TOP VIEW
?

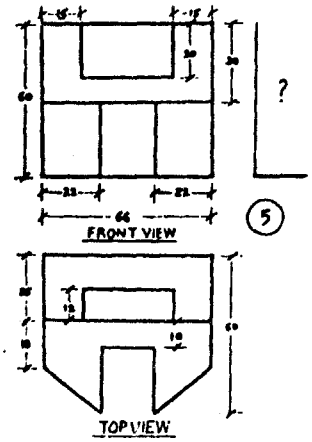
FRONT VIEW
5
TOP VIEW
?

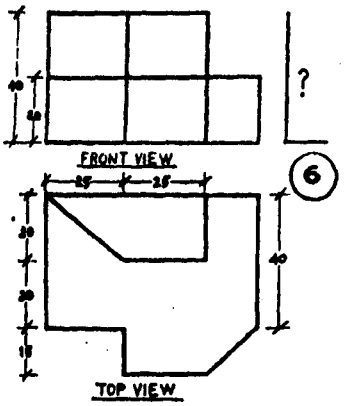
FRONT VIEW
6
TOP VIEW
?

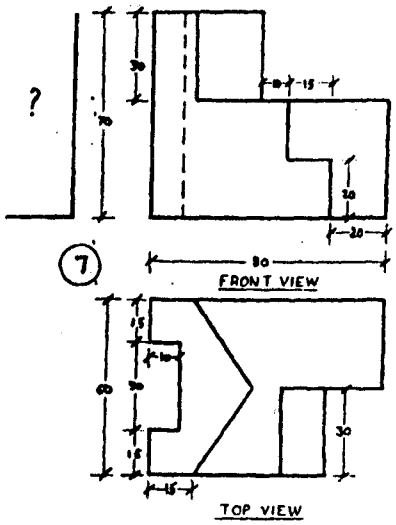
?
7
FRONT VIEW
TOP VIEW

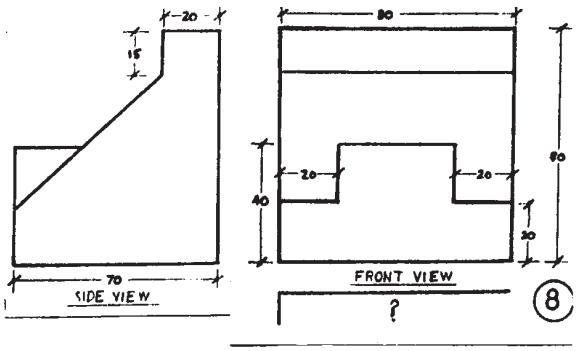

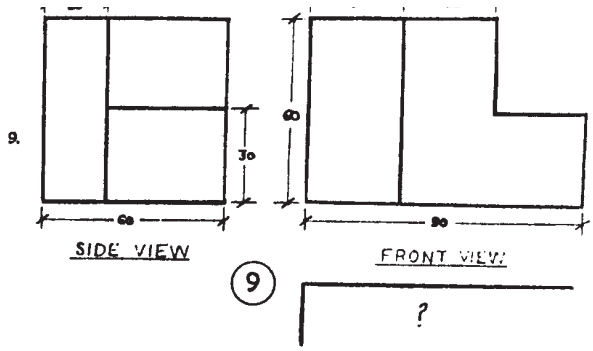

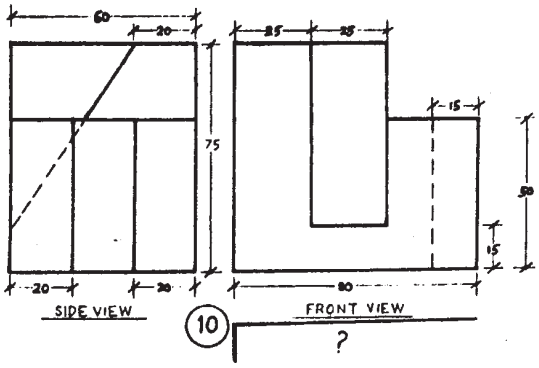

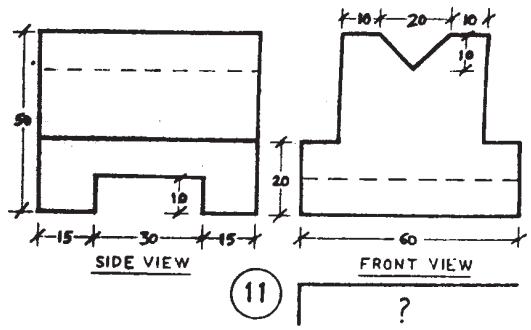

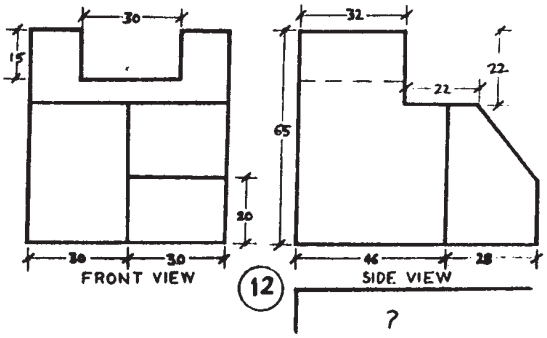

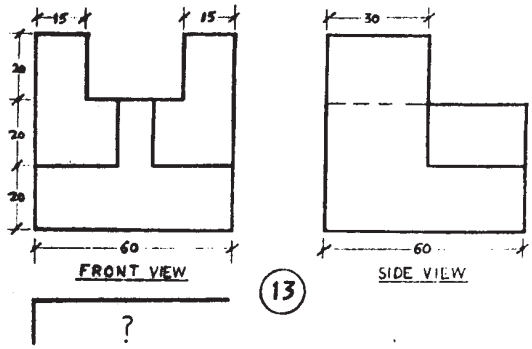

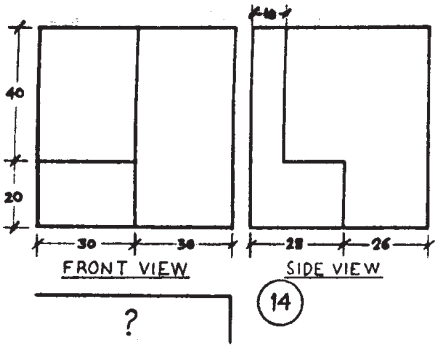

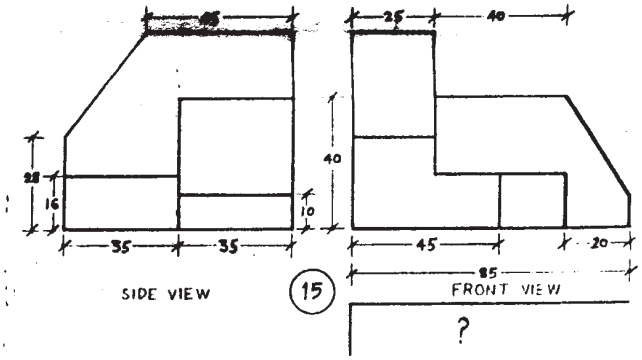

Important:

(i) All dimensions are in mm.

(ii) The above diagrams are not to scale.

(iii) Assume suitably, missing or mismatching dimensions, if any.

(iv) Follow I angle method of projection only in all drawing or sketches.

12. Home Science (Code No. 064)

Home Science as a discipline aims to empower learners by developing understanding of four different areas, namely:

- Food and Nutrition
- Human Development
- Community Resource Management and Extension
- Fabric and Apparel Science

The subject helps students to understand changing needs of Indian society, academic principles as well as develop professional skills.

This would make them competent to meet challenges of becoming a responsible citizen.

OBJECTIVES

The Syllabus at Senior Secondary level develops in the learners an understanding that the knowledge and skills acquired through Home Science facilitates development of self, family and community. It endeavours to -

1. acquaint learners with the basics of human development with specific reference to self and child.
2. help develop skills off judicious management at various resources.
3. enable learners to become alert and aware consumers.
4. impart knowledge of nutrition and lifestyles to enable prevention and management of disease.
5. inculcate healthy food habits.
6. help develop understanding of textiles for selection and care of clothes.
7. develop skills of communication to assist in advocacy and dissemination of knowledge to community.

COURSE STRUCTURE

CLASS XI (THEORY)

One Paper (Theory) **Time: 3 Hours** **70 Marks**

Unit		Marks
I.	Concept of Home Science	2
II.	Know myself	17
III.	Nutrition for Self and Family	17
IV.	My Resources	17
V.	My Apparel	17
		70

Unit I: Concept of Home Science and its Scope (Periods 2)

Home Science, its scope.

Unit II: Know myself : Issues related to adolescents (Periods 33)

Adolescence, meaning, early (12-15 years) and later (16 - 18 years) adolescence, early and late maturers.

Characteristics: Cognitive Development: Transition from concrete to formal operations; physical Development: Growth spurt, sexual development; Social and Emotional development: importance of peer group, interest in the opposite sex, varied and changing interest, concern about future; adolescence a period of strain and stress.

Important developmental tasks: accepting one's physique; achieving new and more matured relations with agemates of both sexes; achieving a masculine/feminine social gender role; achieving emotional independence from parents; preparing for career; reproductive health and prevention of anemia.

Individual differences: difference between same sex, differences across the two sexes, early and late maturers, role of heredity and environment (family, peers, school and neighbourhood).

Interpersonal Skills: with the family, peers and members of the community.

Special needs of adolescents - (i) Nutrition requirements: qualitative and quantitative; (ii) exercises and entertainment; importance of physical activity in social development and prevention of obesity (iii) understanding from parents.

Some problems of adolescence: awkwardness due to growth spurt; freedom and control; depression; alcohol, drugs and smoking; delinquency; problem related to sex; ignorance and increased curiosity; prevention of HIV / AIDS and other sexually transmitted diseases;

Population Education: some problems of over population; neglect of girl child: causes, prevention, legal and social laws, government incentives to improve status of girl child, desire for male child; small family norms.

Unit III : Nutrition for Self and Family (Periods 45)

Definition and relationship between food, nutrition, health: nutritional status; classification of foods on the basis of nutrients and functions; nutritional status and calorie intake as a basis of poverty line.

Functions of food: body building, energy giving, protective, regulatory; physiological, psychological and socio-cultural; signs of good health; physical status, psychological status, mental ability, mortality and longevity.

Selection of foods for optimum nutrition and good health: basic knowledge of nutrients - sources, functions, deficiency and prevention; proteins, carbohydrates, fat, dietary fibre, vitamins - A, D. B 1, B2, niacin, folic acid, B 12 and vitamin C; minerals-calcium, iron and iodine. Basic food groups (ICMR) and their contribution; concept of balanced diet; food and nutrition

requirements for family (ICMR tables); factors influencing selection of food: cultural, family food practices, media, peer group and availability of foods.

Maximum nutritive value from food by proper selection, preparation, cooking and storage: Selection and storage of foods-perishable, semi-perishable, non-perishable; convenience foods; Reasons for spoilage; brief description of household methods of preservation-refrigeration, dehydration, use of chemicals and household preservative. Preparation of food; loss of nutrients during preparation of food and their minimization; Cooking; principles of cooking; Methods of cooking-boiling, steaming, pressure cooking, deep and shallow frying, parboiling, sauteing, roasting and grilling; Effect of cooking on the nutritive value of food; Method of enhancing nutritive value-germination, fermentation, fortification and proper food combination.

Unit IV: My Resources (Periods 36)

Resources: meaning, types: (i) human-knowledge, skills, time, energy, attitudes; (ii) material: money, goods, property; (iii) community facilities; Schools, parks, hospitals, roads, transport, water, electricity, fuel, fodder; need to manage the resources; methods of conservation of shared resources.

Management: meaning and need for management; steps in management: planning, organizing, controlling, implementing and evaluation; decision making and its role in management.

Time and energy management: need and procedure for managing time for occupation and leisure; work simplification: meaning and methods; activities in the home: sleeping, studying, cooking, eating, bathing, washing, entertaining-need to organize space for these activities; use of colours and accessories to make these centres attractive; role of different members of the family in efficient running of a home.

Work ethics: meaning and importance; discipline at work place; reaching on time, staying in seat, knowing the job, using polite language.

Unit V: My Apparel (Periods 34)

Fibre Science: types of fibres: (i) natural-cotton, silk and wool; (ii) man-made pure rayon nylon and polyester) and blend (terrycot, terrysilk, terrywool,).

Fabric Construction: Basic procedure of any yarn making (spinning, mechanical spinning, chemical spinning, weaving: plain, twill & satin, other methods-knitting and nonwoven, effect of weaves on appearance, durability and maintenance of garment.

Finishing: meaning and importance; types: (i) basic: cleaning, bleaching, stiffening, tantering; (ii) special: mercerisation, shrinkage control, water proofing; dyeing and printing.

PRACTICALS

Time: 3 Hours **30 Marks**

UNIT		MARKS
I.	Concept of Home Science	-
II.	Know myself	-
III.	Nutrition for Self & Family	8
IV.	My Resources	8
V.	My Apparel	7
	Record	5
	Viva	2
	Total	30

Unit I : Concept of Home Science (Periods 2)

Unit II : Know myself : issues related to adolescents (Periods 8)

Activity: Observe and test your own strengths and weaknesses; Discuss about them in class with your teacher and fellow students; take decision about maximum utilization of strength and improvement upon weaknesses.

Activity: Report situations from your life to indicate your interaction within the family, with peers and with members of the community.

Unit III : Nutrition for Self and Family (Periods 28)

Activity: Look for signs of good health within your family.

Activity: Make a list of foods available in the local market according to food groups.

Activity: Observe how different food stuffs are stored at home and evaluate the effectiveness of the method; practise skills to preserve and optimise nutrients by preparing meals and snacks.

Practical: Preparing meals and snacks

Practical: Household methods of food preservation - Jam, Squash / Syrup Pickles / Chutney.

Unit IV : My Resources (Periods 30)

Activity (Observation): Observe and list resources available at home and in neighbourhood. Make a detailed study on available community resource and its management, suggest improvements.

Activity: Critically evaluate anyone activity centre of your house. Suggest improvements.

Activity: Suggest a work plan for yourself for a day and state where and why will you take help from others.

Practicals: Make flower and foliage arrangements, floor decorations, clean and polish brass, glass,

iron, aluminium and plastic surfaces.

Unit V : My Apparel (Periods 24)

Activity: Collect samples of fabrics and study characteristics for identification.

Activity: Collect samples of weaves and identify them.

Practicals: Carry out burning test, slippage test, tearing test and test for colour fastness.

Practical: Dyeing: plain and tie dye printing: use blocks (available or make you own) on small sample.

CLASS XII (THEORY)

One Paper (Theory) **Time: 3 Hours** **70 Marks**

Unit		Marks
I.	Know Little Children	17
II.	Nutrition for Self and Family (contd.)	17
III.	Money Management and Consumer Education	17
IV.	My Apparel	17
V.	Things I can do with my Home Science Training	2
	Total	**70**

Unit I: Know Little Children (0-3 years) (Periods 34)

Some specific characteristics: physical and motor-height, weight and body proportions; motor development during 0-3 months, 3-6 months, 6-9 months, 9-12 months and 1-3 years (milestones only); social and emotional developments; recognition of people around; socialization, expression of emotions; cognitive development; learning through concrete operations and language development.

Protection from preventable diseases: immunization - concept and types (natural and acquired), breast feeding (one of the ways to develop natural immunity); immunization chart; symptoms and incubation period of childhood diseases - TB, DPT, polio, measles, cholera, diarrhoea.

Special needs of disadvantaged and disabled children: socially disadvantaged, physically handicapped (partially blind & deaf, affected/missing limb): characteristics & needs.

Substitute care at home and outside: siblings, grand parents, neighbours creche, day care centres etc: Integrated Child Development Scheme (ICDS) - objectives and functions.

Unit II : Nutrition for Self and Family (Periods 36)

Planning meals for the family: meaning and importance of meal planning, principles and factors affecting meal planning, planning meals for the family; keeping in mind the needs of individual members, including children, pregnant women, lactating mother, members suffering from fever and diarrhoea; role and preparation of ORS.

Ways to ensure good health for the family: using safe drinking water-importance of potable water for good health, qualities of safe drinking water; household methods of making water safe for drinking; boiling, filtering, use of alum and chlorine tablet role of hygiene for food handlers at home level. Safety against food adulteration, definition and meaning of food adulteration as given by PFA; common adulterants present in cereals, pulses, milk and milk products, fats and oils, sugar, jaggery, honey, spices and condiments. ill effects of some of the adulterants present in the foods: kesari dal, metanil yellow, argemone seeds.

Unit III : Money Management and Consumer Education (Periods 36)

Family Income: various sources of family income: (i) money income, (ii) real income, direct and indirect; Supplementing family income-need & ways; need and procedure for keeping household accounts.

Savings and Investment: meaning and importance of savings; ways/methods of investment-banks, post-office, LIC, Units, PPF, PF; basis for selection of method of investment risk, security, profit, tax saving.

Consumer Protection and Education: meaning, problems faced by consumer, Consumer Protection Act (1986) and Services; Consumer aids: levels, standardization marks, advertising, guidebooks/leaflets, Consumer redressal forum.

Unit IV: My Apparel (Periods 35)

Clothing and its relation to personality: Elements of line, colour, texture: elements of design: balance, rhythm, proportion, harmony, emphasis; factors that influence the selection of clothes: personality, age, climate, occupation, figure, occasion, fashion; selection and purchase of fabrics. Purpose, quality, cost, season, reliable shop.

Checking size and quality in ready-made garments, need and criteria: seams, hem, plackets, fasteners, workmanship, design, drape.

Care of clothes: General principles and precautions to be followed while removing stains and washing: Cleansing agents: soaps and detergents (basic differences); Storage of clothes.

Unit V: Things I can do with my Home Science Education (Periods 3)

Application of knowledge of Home Science in everyday life.

Usefulness of some of the skills learnt here for supplementing family income.

Skills learnt here can be gainfully used for employment (self-employment, apprenticeship).

Further training required to make this field a career: various sources and facilities available for training.

Practicals

Time: 3 Hours **30 Marks**

Unit		Marks
I.	Know Little Children	3
II.	Nutrition for Self and Family (contd.)	11
III.	Money Management and Consumer Education	3
IV.	My Apparel	6
V.	Things I can do with my Home Science Training	-
	Record	5
	Viva	2

Unit I : Know Little Children (0-3 years) (Periods 2)

Activity: Observe a child in neighbourhood or at home for various milestones of physical and motor developments and prepare a chart.

Practical: Make an interview schedule for working mother.

Activity: Interview three mothers working outside the home to find out their arrangements of substitute care for their children (0-3 yrs) in their absence.

Practical-Prepare of chart of mile stones

Practical: Prepare a chart for immunization of a child.

Unit II : Nutrition for Self and Family (Periods 22)

Practicals: Plan meals for the family and carry out modifications to suit individual needs including persons suffering from fever or diarrhoea and for pregnant and lactating mother. Prepare and serve one dish.

Practical: Preparation of oral dehydration solution

Practical: Simple tests for checking adulteration in-

(i) Cereals

(ii) Pulses

(iii) Milk and milk products

(iv) Tea leaves

(v) Dhania powder

(vi) Red chillies

(vii) Haldi powder

(viii) Gur (Jaggery)

(ix) Black Pepper (Whole)

Unit III: Money management and Consumer Education (Periods 8)

Activity: Open account. Find out and report how an account is opened in a bank and post office. Collect and fill forms.

Activity: Read and evaluate labels of any four household item bearing different standardization marks.

Practical: Fill bank/post office forms

Practical: Prepare one label each for four household items/products bearing different standardization marks.

Unit IV : My Apparel (Periods 42)

Practical : Make sample of

(a) basic stitches and seams:

- (i) Running Stitch
- (ii) Hemming
- (iii) Blind stitch
- (iv) Inter-locking

(b) Fasteners - Buttons and hooks.

(c) Patch work

or make an apron and incorporate all the above (a, b, and c).

Practical: Examine quality in ready-made garments.

Practicals: Relative effect of temperature of water on the clothes during the process of washing clothes (cold, lukeworm, hot). Draw conclusions and how this knowledge is helpful.

Practical:

Removal of stains of -

- (i) Tea stain
- (ii) Coffee stain
- (iii) Curry
- (iv) Grease
- (v) Ink
- (vi) Ball point ink
- (vii) Lipstick
- (viii) Blood

Practical: Make a soap/detergent (liquid/powder/cake)

Instructions to the Examiners:

Group A

1. Three marks are allotted to Q. No. 1 in group A and know little children. Any question can be selected from the list of questions given in Group A. 3 marks for correct chart of milestones/ immunication/interview schedule for working mothers.

Group B

2. Eight marks are allotted to Q. No. 2 in Group 2 in Group B on 'Nutrition for Self Family'. Any question can be selected from the list of questions given in Group B Part (a). Further sub-division of eight marks :

(i)	Planning and selection of foods according to specific requirements	2 Marks
(ii)	Preparation of one dish	3 Marks
(iii)	Service	2 Marks
(iv)	Work place and method of work	1 Mark

3. Three marks are allotted for question No. 3 from Group B Part (b and c). Further Sub-division of three marks:

(i) Preparation of oral dehydration solution — 3 Marks

or

detection of adulterant

1 mark for correct test

2 marks for correct identification of adulterant.

4. Three marks are allotted to Q. No. 4 from Group C on money management and consumer education. Further sub-division of three marks:

Selection of correct form	1 Mark
Correct filling of form	2 Marks
or	
Preparation of label	2 Marks
Correct quality mark according to the product	1 Mark

5. Three marks are allotted to Q. No. 5 from Group D part (a) on 'My Apparel'.

Three Marks for checking of quality of ready-made garment

or

Three Marks for correct reporting of effect of temperature on a particular cloth.

6. Three Marks are allotted to Q. No. 6 from Group D (part d+e). Further sub-division of two marks

Selection of correct detergent	1 Mark
Removal of stain - using chemicals/detergents/bleach	1 Mark
or	
Selection of correct ingredients	1 Mark
Preparation of soap/detergent	1 Mark

7. Class Record — 5 Marks

8. Viva - questions should be related to practicals conducted during the examination — 2 Marks

General Instructions:

A. Out of the several alternatives given in each group of questions only one is to be assigned to the group.

B. Preparation of dish means-methodical procedure, economical use of ingredient and finished product.

C. Neat work

D. In all, six questions are to be selected.

1 from Group A		3 Marks
2 from Group B	8 + 3	11 Marks
1 from Group C		3 Marks
2 from Group	3 + 3	6 Marks
Record		5 Marks
Viva		2 Marks
Total		30 Marks

List of Questions

Q. No. I : List of questions regarding the experiments from Group A (Unit I parts a, b and c). 3 Marks

1. Prepare a chart to record the milestones of physical development of child from 0-1 year.
2. Prepare a chart to record the milestones of language development of a child from 0-3 years.
3. Prepare a chart to record the milestones of motor development of a child from 0-3 years.
4. Prepare an immunisation chart for a child from 0-3 years.

5. Prepare an interview schedule for a working mother to find out the arrangement for her pre-school child in her absence.

Q. No. II : List of questions regarding the experiments from Group B (Unit II part a). 8 Marks

1. Plan meal for a family and suggest modifications for: any one of the following:

   a lactating mother / a pregnant woman / a person suffering from diarrhoea / a person suffering from fever

   Prepare one of the modified dishes.

Q. No. III : List of questions regarding the experiments from Group B (Unit II parts b and c). 3 Marks

1. Prepare oral rehydration solution. (ORS)

2. Test adulteration and identify the adulterant in one of the following:

(i) Cereals

(ii) Pulses

(iii) Milk and Milk Products

(iv) Tea leaves

(v) Dhania Powder

(vi) Gur (Jaggery)

(vii) Haldi Powder

(viii) Black Pepper (Whole)

Q. No. IV : List of questions regarding the experiments from Group C (Unit III parts a and b). 3 Marks

1. Select and fill form for one of the following:

   (a) To withdraw small amount of money.

   (b) To withdraw large amount of money

   (c) To open account in post office/bank

   (d) To deposit money in cash.

2. Prepare label for any food product with proper quality mark.

Q. No. V : List of questions regarding the experiments from Group D (Unit IV parts a, b and c) 3 Marks

1. Make a sample of any **one** of the following:

   (i) Hemming

   (ii) Running stitch

(iii) Blind stitch

(iv) Inter locking

(v) Fasteners - buttons or hook

2. Examine two points (seams fastners, patch, embroidery, finishing of edges) in a ready-made garment and write your observations.

3. Test the effect of temperature of water (hot, lukewarm and cold on cotton / wool/silk / nylon /terricot cloth) and record your observations.

Q. No. VII : List of questions regarding the experiments from Group D (Unit IV parts c and d). 3 Marks

1. Remove one of the following stains from a cotton cloth.

   (i) Tea stain

   (ii) Coffee stain

   (iii) Curry stain

   (iv) Grease

   (v) Ink

   (vi) Ball point ink

   (vii) Lipstick

   (viii) Blood

2. Prepare liquid soap

3. Prepare powder detergent

List of articles to be supplied by the centre:

1. Cooking utensils for each candidate - Dekchi (saucepan) with cover, Karahi, Tawa, Chakla-Belen, Karchi, Karahi, Spoons, Frying Spoons, Fry pan, Stove or Gas Burner, Match box, Pressure Cooker.

2. Sample of adulterated food.

3. Chemicals and reagents for detection of adulteration.

4. Sample of stain.

5. Reagents for removal of stains.

6. Dry and fresh ingredients according to the question paper set e.g. besan, dal, vegetables, milk, spices etc.

7. Different types of bank and post-office forms.

8. Drawing sheets and plain papers. .

9. Gum.

10. Samples of different types of cloth (to test effect of temperature of water).
11. Ingredients for preparation of soaps and detergents.
12. Water arrangements.

List of articles to be brought by the candidates:

1. Serving utensils and cutlery.
2. Table cloth, napkin, tray.
3. Tray
4. Painting colours and brushes, felt pen, eraser, scale, scissors.
5. Cloth (10 cm x 10 cm) (for sample of stitches).
6. Any ready-made garment (may be used).
7. Needle and thread.
8. Hooks and buttons.
9. Dusters - 2
10. Newspapers - 2 sheets
11. Class record or sessional work.

13. Agriculture (Code No. 068)

CLASS XI (THEORY)

One Theory Paper **Time: 3 Hours** **70 Marks**

Unitwise Weightage

	Units	Marks
1.	Agrometeorology, Genetics and Plant Breeding, Biochemistry and Microbiology	35
2.	Livestock Production	35

Unit 1 : Agro meteorology, Genetics and Plant Breeding, Biochemistry and Microbiology 84 Pds.

Agrometerology: Elements of Weather-rainfall, temperature, humidity, wind velocity, Sunshine weather forecasting, climate change in relation to crop production. **16 Pds.**

Genetics & Plant Breeding **32 Pds.**

(a) Cell and its structure, cell division-mitosis and meosis and their significance.

(b) Organisation of the genetic materials in chromosomes, DNA and RNA.

(c) Mendel's laws of inheritance. Reasons for the success of Mendal in his experiments Absence of linkage in Mendel's experiments.

(d) Quantitative inheritance, continuous and discontinuous variation in plants.

(e) Role of Genetics in Plant breeding, self and cross-pollinated crops, methods of breeding in field crops-introduction, selection, hybridization, mutation and polypolidy, tissue and cell culture.

(f) Plant Biotechnology-definition and scope in crop production.

Biochemistry: Classification of carbohydrates; proteins; lipids; vitamins and enzymes. **16 Pds.**

Microbiology: Micro-organisms-Algae, Bacteria, Fungi, Actinomyceters, Protozoa and Viruses. Role of micro-organisms in respiration, fermentation and organic matter decomposition 20 Pds.

Unit 2: Livestock Production 84 Pds.

Scope and importance **16 Pds.**

(a) Importance of livestock in agriculture and industry, White revolution in India.

(b) Important breeds Indian and exotic, distribution of cows, buffaloes and poultry in India.

Care and management **52 Pds.**

(a) Systems of cattle and poultry housing.

(b) Principles of feeding, feeding practices.

(c) Balanced ration-definition and ingredients.

(d) Management of calves, bullocks, pregnant and milch animals as well as chicks crockrels and layers, poultry.

(e) Signs of sick animals, symptoms of common diseases in cattle and poultry, Rinderpest, black quarter, foot and mouth, mastius and haemorrhagic septicaemia coccidiosis, Fowl pox and Ranikhet disease, their prevention and control.

Artificial Insemination **16 Pds.**

Reproductive organs, collection, dilution and preservation of semen and artificial insemination, **role of artificial insemination in cattle improvement.**

Livestock Products: Processing and marketing of milk and Milk products.

CLASS XI (PRACTICALS)

One Paper **Time: 3 Hours** **30 Marks**

Unitwise Weightage

Units		Marks
A.	Live stock Practical	16
B.	Observation 05	
C.	Collection and Visits	05
D.	Viva Voce	04

A. Livestock Practical **38 Pds.**

(a) Handling of bullocks for field operation/drenching/shoe fixing.

(b) Score-card, method of judging milch animals.

(c) Sign of heat in cows.

(d) Grooming.

(e) Determination of age of cattle

(f) Computing ration for an animal.

(g) Preparation of hay and silage.

(h) Calculating the body weight of farm animals.

(i) Care and handling of pregnant and milch cattle.

(j) Administration of some common medicines.

(k) Studying of the signs of sick animals.

(l) Testing of milk fat and gravity.

(m) Milking of cows/buffaloes.

(n) Cleaning and maintenance of cattle sheds.

(o) Calculating the cost of milk production per kg.

(p) Culling of birds.

(q) Cleaning of poultry houses.

(r) Management of deep litter system.

(s) Practice of record keeping and calculation of the cost of production of eggs per dozen.

(t) Computation of poultry feed.

B. Observation **16 Pds.**

(a) Identification of common breeds of cows, buffaloes and poultry birds.

(b) Observation of dehorrning, branding, tatooing, castrating in local veterinary hospital.

(c) Observation of artificial insemination in the local veterinary hospital.

(d) Observing vaccination of poultry birds against common diseases.

C. Collection & Visits

(a) Preparation of practical record.

(b) Visit to the local dairy and poultry farms, diary plants and plant breeding biotechnology laboratory and agro-meteorological laboratory.

Note: Students should submit a written report on the basis of experience acquired in their visits.

D. Viva Voce

CLASS XII (THEORY)

One Theory Paper **Time: 3 Hours** **70 Marks**

Unitwise Weightage

	Units	Marks
1.	Crop Production	40
2.	Horticulture	30

Unit 1: Crop Production 96 Pds.

Introduction **08 Pds.**

(a) Targets and achievement in foodgrain production in India since independence and its future projections, sustainable crop production, commercialisation of agriculture and its scope in India.

(b) Classification of field crops based on their utility-cereals, pulses, oils seeds, fibre, sugar

and forage crops.

Soil, Soil fertility, Fertilizers and Manures **24 Pds.**

(a) Soil, soil pH, Soil texture, soil structure, soil organisms, soil tilth, soil fertility and soil health.

(b) Essential plant nutrients, their functions and deficiency symptoms.

(c) Soil types of India and their characteristics.

(d) Organic nature, common fertilizers including straight, complex, fertilizer mixtures and biofertilizers; integrated nutrient management system.

Irrigation and Drainage **24 Pds.**

(a) Sources of irrigation (rain, canals, tanks, rivers, wells, tubewells).

(b) Scheduling of imagination based on critical stages of growth, time interval, soil moisture content and weather parameters.

(c) Water requirement of crops.

(d) Methods of irrigation and drainage.

(e) Watershed management

Weed Control **8 Pds.**

Principles of weed control, methods of weed control (cultural, mechanical, chemical, biological and Integrated weed management).

Crops **32 Pds.**

Seed bed preparation, seed treatment, time and method of sowing/planting, seed rate; dose method and time of fertilizer application, irrigation, interculture and weed control; common pests and diseases, caused by bacteria, fungi virus and nematod, integrated pest management, harvesting, threshing, post harvest technology: storage, processing and marketing of major field crops-Rice, wheat, maize, sorghum, pearlmillet, groundnut, mustard, pigeonpea, gram, sugarcane, cotton berseem.

Unit 2: Horticulture 72 Pds.

(a) Importance of fruits and vegetables in human diet, Crop diversification & processing Industry.

(b) Orchard-location and layout, ornamental gardening and kitchen garden.

(c) Planting system, training, pruning, intercroping, protection *from frost* and sunburn.

(d) Trees, shrubs, climbers, annuals, perennials-definition and examples. Propagation by seed, cutting, budding, layering and grafting.

(e) Cultivation practices, processing and marketing of:

(i) Fruits - mango, papaya, banana, guava, citrus, grapes.

(ii) Vegetables - Radish, carrot, potato, onion, cauliflower, brinjal, tomato, spinach and cabbage.

(iii) Flowers - Gladiolus, canna, chrysanthemums, roses and marigold.

(f) Principles and methods of fruit and vegetable preservation.

(g) Preparation of jellies, jams, ketchup, chips and their packing.

CLASS XII (PRACTICALS)

One Paper **Time : 3 Hours** **30 Marks**

Unitwise Weightage

Units		Marks
A.	Field Crop and Horticulture Practicals	10 + 6
B.	Observation 05	
C.	Collection and visits	07
D.	Viva Voce	02

A. Field crop Practicals **38 Pds.**

(a) To find out germination percentage of crop seeds.

(b) Soil sampling and determination of soil pH.

(c) Preparation of nursery and seed beds.

(d) Seed treatment with fungicides and microbial culture.

(e) Layout of irrigation and drainage channels.

(f) Calculation of fertilizer requirement of crops on the basis of nutrient needs.

(g) Methods of fertilizer application including use of bio-fertilizers.

(h) Methods of sowing/planting.

(i) Interculture operation-weeding, earthing.

(j) Preparation of FYM and Compost.

(k) Uses of sprayers and dusters for pest control and nutrient spray.

(l) Harvesting of field crops.

(m) Determination of moisture content of crop seeds.

(n) To find out 100-grain weight of crop seeds.

Horticulture Practical

(a) Layout of the school garden.

(b) Preparation for nursery raising, pot filling and planting.

(c) Propagation by cutting, layering, grafting and budding.

(d) Pruning and training of trees.

(e) Establishment and maintenance of school lawn.

(f) Preparation of tomato ketchup, jam, jelly, chips of fruits/vegetables.

Observation **16 Pds.**

(a) Identification of seeds of crops.

(b) Identification of plants of various crops and weeds.

(c) Identification of manures and fertilizers.

(d) Identification of different types of tools and implements.

(e) Identification of common local pests and diseases of plants.

(f) Identification of different types of ornamental trees, annuals, biennials, perennials.

C. Collection and visits **18 Pds.**

(a) Preparation of herbarium of crop and weed plants.

(b) Collection and preservation of important crop pests and diseased plant parts.

(c) Practical record.

(d) Participation in and visit to crop demonstrations, field operation, field days, agriculture fairs organised in the locality by the local extension agencies.

(e) Visit to the important orchards of the locality, state research farms/seed multiplication farms and agricultural Universities/Agricultural Colleges, food processing industry.

Note: Students should submit a written report on the basis of experience acquired during their visits.

D. Viva Voce

Agriculture Practicals

A. List of Practicals **18 Pds.**

1. Seed treatment against the pest indicated.
2. Find out 1000 grain weight of crop seeds provided.
3. Prepare a layout plan of a farm of 10 hectares or a school garden of one hectare/ irrigation and drainage channels in a hectare of field.
4. Taking soil sample for soil moisture/pH determination.
5. Prepare an ideal seed bed/Nursery bed for the grain or vegetable crop indicated.
6. Calculate the fertilizer requirement for given area of the crop indicated.

7. Calculate the quantity of pesticide required for a given area against the pest indicated of a certain field crop. Also demonstrate the method of its application.
8. Demonstrate how would you prepare an ideal compost with the farm waste material provided.
9. Prepare the vegetable/fruit products indicated.
10. Demonstrate the ideal method of propagation of the plant indicated.
11. Identity the specimens and write two lines comment on each of them.
12. Practical records, collection, sessional work, maintenance of potted plants and reports on visits.
13. Viva-Voce.

General guidelines for evaluation

1. (i) The examiner may give anyone out of the first 7 practical exercises. It will carry 10 marks.

   (ii) He will alot one out of the next two practicals (8 & 9) which will carry 6 marks.

   (iii) For identification the teacher may provide 5 items, each item will carry one mark. (1/2 mark for identification and 1/2 mark for 2 lines comment) (5 marks)

   (iv) Practical records and maintenance of potted plants will carry 2 marks each. For collection, sessional work and visit reports, one mark each. (7 marks)

   (v) Viva Voce will carry 2 marks

2. In case of practicals, fruits preservation and methods of propagation, the student will have to write the procedure adopted and the necessary precautions to be taken in the answer sheet provided.

Suggested References

1. Garden Flowers, by V. Swaroop, National Book Trust of India.
2. Sashya Vigyan Ke Moolbhoot Sidhant, by U.K. Verma, Hindi Granth Academy, Patna (Bihar).
3. Modern Techniques of raising field crops, by Chhida Singh, Oxford and IBH Publishing Co., New Delhi.
4. Manures and Fertilizers, by K.S. Yawalkar, J.P. Agarwal and S. Bokde.
5. Fruits by Ranjeet Singh, National Book Trust, New Delhi.
6. Vegetable by B. Chaudhuri, National Book Trust, New Delhi.
7. Important Breeds of Cattle and Buffaloes, ICAR, New Delhi.
8. Hand Book of Agriculture, ICAR, New Delhi.
9. Hand Book of Animal Husbandry, ICAR, New Delhi.

10. Soils of India, FAI Publication, New Delhi.

11. Plant Breeding, by B.D. Singh, Kalyani Publication, New Delhi.

12. Genetics by P .C. Gupta Rastogi Pub., Meerut (U.P.).

13. The Soil Science by T.D. Biswas and S.K. Mukherjee, Tata McGraw-Hill Pub. Co. Ltd., New Delhi.

14. Hand Book of Horticulture, ICAR, New Delhi.

Instruction-cum-Practical Manual, NCERT, Publications

(i)	Agricultural Meteorology	NCERT
(ii)	Milk and Milk Products	-do-
(iii)	Feeds and Feeding of Dairy animals:	-do-
(iv)	Fertilizers and manures	-do-
(v)	Soil and properties	-do-
(vi)	Plant Propagation	-do-
(vii)	Floriculture	-do-
(viii)	Fruit Culture	-do-

14. Computer Science (Code 083)

"…It is unworthy of excellent men to lose hours like slaves in the labour of calculation which could safely be regulated to anyone else if machines were used.." said Leibnitz in the beginning of seventeenth Century.

Farsighted vision, in-depth study accompanied by target-oriented effort of such torchbearers have ushered in an age of computers.

Be it Science or Engineering, medical world or launching Space Shuttles, Study of Universe or global communications, Research and Development or Edutainment – the core ingredient is computer.

Learning Objectives:

1. To understand the problem statement
2. To develop logic for problem solving
3. To understand the concept of Object Oriented Methodology
4. To implement Object Oriented Programming using C++
5. To understand the concept of working with Relational Database
6. To understand the basic concept of algebra of logic
7. To understand and explore the world of communication and networks

Competencies:

The student will be proficient in the following:

1. Identification of a Computer System
2. Categorisation of parts of an objective system
3. Problem Solving
4. Designing an efficient logic using object oriented approach for solution development
5. Database handling
6. Logic Circuit designing

Class XI (Theory)

Duration: 3 hours **Total Marks: 70**

Unit No.	Unit Name	Marks
1.	COMPUTER FUNDAMENTALS	06
2.	PROGRAMMING METHODOLOGY	10
3.	INTRODUCTION TO PROGRAMMING IN C++	44
4.	COMPUTER SYSTEM ORGANISATION	10
		70

UNIT 1: COMPUTER FUNDAMENTALS

Evolution of computers; Basics of computer and its operation: Functional Components and their inter-connections, concept of Booting, Use of Operating System for directory listing, hierarchical directory structure, renaming, deleting files/folders, formatting floppy, copying files, concepts of path and pathname, switching between tasks, installation/removal of applications;

Software Concepts:

Types of Software - System Software, Utility Software and Application Software;

System Software: Operating System, Compilers, Interpreters and Assembler;

Operating System: Need for operating system, Functions of Operating System (Processor Management, Memory Management, File Management and Device Management), Types of operating system – Interactive (GUI based), Time Sharing, Real Time and Distributed; Commonly used operating systems: Solaris, UNIX,LINUX, Mac OS, MS Windows;

General functionalities of an Operating System to be illustrated and implemented using any of the above operating systems.

UNIT 2: PROGRAMMING METHODOLOGY

General Concepts; Modular approach; Clarity and Simplicity of Expressions, Use of proper Names for identifiers, Comments, Indentation; Documentation and Program Maintenance; Running and Debugging programs, Syntax Errors, Run-Time Errors, Logical Errors;

Problem Solving Methodology and Techniques: Understanding of the problem, Identifying minimum number of inputs required for output, Step by step solution for the problem, breaking down solution into simple steps, Identification of arithmetic and logical operations required for solution, Using Control Structure: Conditional control and looping (finite and infinite);

UNIT 3: INTRODUCTION TO PROGRAMMING IN C++

"Object Oriented Technology is regarded as the ultimate paradigm for the modeling of information, be that information data or logic. The C++ has by now shown to fulfill this goal."

Programming by Example In C++ Language :

C++ character set, C++ Tokens (Identifiers, Keywords, Constants, Operators), Structure of a C++ Program (include files, main function); Header files – iostream.h, iomanip.h; **cout**, **cin**; Use of I/O operators (<< and >>), Use of endl and setw(), Cascading of I/O operators, Error Messages; Use of editor, basic commands of editor, compilation, linking and execution; standard input/output operations from C language: gets(), puts() of stdio.h header file;

Data Types, Variables and Constants:

Concept of Data types; Built-in Data types: **char**, **int**, **float** and **double**; Constants: Integer Constants, Character Constants (Backslash character constants - \n, \t), Floating Point Constants,

String Constants; Access modifier: **const**; Variables of built-in data types, Declaration/ Initialisation of variables, Assignment statement; Type modifier: signed, unsigned, long;

Operators and Expressions:

Operators: Arithmetic operators (-,+,*,/,%), Unary operator (-), Increment and Decrement Operators (—,++), Relational operators (>,>=,<,<=,==,!=), Logical operators (!, &&, ||), Conditional operator: <condition>?<if true>:<else>; Precedence of Operators; Expressions; Automatic type conversion in expressions, Type casting; C++ shorthand's (+=, -=, *=, /=, %=);

Flow of control:

Conditional statements: **if-else**, Nested **if**, **switch..case..default**, Nested **switch..case**, break statement (to be used in switch..case only); Loops: **while**, **do - while** , **for** and Nested loops;

Structured Data Type: Array

Declaratrion/initialisation of One-dimensional array, Inputting array elements, Accessing array elements, Manipulation of Array elements (sum of elements, product of elements, average of elements, linear search, finding maximum/minimum value);

Declaration/Initialization of a String, string manipulations (counting vowels/consonants/digits/ special characters, case conversion, reversing a string, reversing each word of a string);

String Functions:

Header File: string.h

Function: **isalnum(), isalpha(), isdigit(), islower(), isupper(), tolower(), toupper()**;

Character Functions:

Header File: ctype.h

Functions: **isalnum(), isalpha(), isdigit(), islower(), isupper(), tolower(), toupper(), strcpy(), strcat(), strlen(), strcmp(), strcmpi()**;

Mathematical Functions:

Header File-math.h, stdlib.h;

Functions: **fabs()**, **log()**, **log10()**, **pow()**, **sqrt()**, **sin()**, **cos()**, **abs(),**

Other Functions:

Header File- stdlib.h;

Functions: **randomize(), random()**;

Two-dimensional Array:

Declaration/initialisation of a two-dimensional array, inputting array elements Accessing array elements, Manipulation of Array elements (sum of row element, column elements, diagonal elements, finding maximum/minimum values);

User Defined Functions:

Defining a function; function prototype, Invoking/calling a function, passing arguments to function, specifying argument data types, default argument, constant argument, call by value, call by reference, returning values from a function, calling functions with arrays, scope rules of functions and variables; local and global variables;

Event programming: Games as examples

General Guidelines: Initial Requirement, developing an interface for user (it is advised to use text based interface screen), developing logic for playing the game and developing logic for scoring points

1. Memory Game: A number guessing game with application of 2 dimensional arrays containing randomly generated numbers in pairs hidden inside boxes.
2. Cross 'N Knots Game: A regular tic-tac-toe game
3. Hollywood/Hangman: A word Guessing game
4. Cows 'N Bulls: A word/number Guessing game

UNIT 4: COMPUTER SYSTEM ORGANISATION

Number System: Binary, Octal, Decimal, Hexadecimal and conversion between two different number systems. Integer, Floating Point, 2's complement of number from base-2;

Internal Storage encoding of Characters: ASCII, ISCII (Indian scripts Standard Code for Information Interchange), and UNICODE; Microprocessor: Basic concepts, Clock speed (MHz, GHz), 16 bit, 32 bit, 64 bit processors; Types – CISC, RISC; Concept of System Buses, Address bus, Data bus,

Concepts of Accumulator, Instruction Register, and Program Counter;

Commonly used CPUs and CPU related terminologies: Intel Pentium Series, Intel Celeron, Cyrix, AMD Series, Xeon, Intel Mobile, Mac Series; CPU Cache; Concept of heat sink and CPU fan, Motherboard; Single, Dual and Multiple processors;

Types of Memory: Cache (L1,L2), Buffer, RAM (DRAM, SDRAM, RDRAM, DDRAM), ROM (PROM, EPROM), Hard Disk Drive, Floppy Disk Drive, CD/DVD Drive; Access Time;

Input Output Ports/Connections: Power connector, Monitor Socket, Serial (COM) and Parallel (LPT) port, Universal Serial Bus port, PS-2 port, SCSI port, PCI/MCI socket, Keyboard socket, Infrared port (IR), audio/speaker socket, Mic socket; data Bus; external storage devices connected using I/O ports;

Keyboards: QWERTY, Inscript, Multilingual, Dvorak

Printers: Dot Matrix Printer, Line Printer, Deskjet/Inkjet/Bubblejet Printer, Laser Printer;

Power Supply: Switched Mode Power Supply (SMPS): Elementary Concept of Power Supply: Voltage, Current, Power (Volt, Ampere, Watt), SMPS supplies – Mother Board,

Power Conditioning Devices: Voltage Stabilizer, Constant Voltage Transformer (CVT), Uninterrupted Power Supply (UPS)-Online and offline.

Note: Students should be asked to prepare a e-governance report of an organization describing the Computer System Configuration, Input Output Mechanism, Encoding scheme and Software Installation.

Class XI (Practical)

Duration: 3 hours **Total Marks: 30**

1. Programming in C++ **10**

One programming problem in C++ to be developed and tested in Computer during the examination. Marks are allotted on the basis of following:

Logic	:	5 Marks
Documentation/Indentation	:	2 Marks
Output presentation	:	3 Marks

2. Project Work **10**

(As mentioned in general guidelines for project, given at the end of the curriculum)

3. Practical File **05**

Must have minimum 15 programs from the topics covered in class XI course.

4. Viva Voce **05**

Viva will be asked from syllabus covered in class XI and the project developed by student.

Class XII (Theory)

Duration: 3 hours **Total Marks: 70**

Unit No.	Unit Name	Marks
1.	PROGRAMMING IN C++	30
2.	DATA STRUCTURE	16
3.	DATABASE AND SQL	8
4.	BOOLEAN ALGEBRA	8
5.	COMMUNICATION AND NETWORK CONCEPTS	8
		70

UNIT 1: PROGRAMMING IN C++

REVIEW: *C*++ covered In Class -XI,

Defining a symbol name using typedef keyword and defining a macro using #define directive; Need for User defined data type;

Structures:

Defining a Structure, Declaring structure variables, Accessing structure elements, Passing structure to Functions as value and reference argument/parameter, Function returning structure, Array of structures, passing an array of structure as an argument/ a parameter to a function;

Object Oriented Programming:

Concept of Object Oriented Programming – Data hiding, Data encapsulation, Class and Object, Abstract class and Concrete class, Polymorphism (Implementation of polymorphism using Function overloading as an example in C++); Inheritance, Advantages of Object Oriented Programming over earlier programming methodologies,

Implementation of Object Oriented Programming concepts in C++:

Definition of a class, Members of a class - Data Members and Member Functions (methods), Using Private and Public visibility modes, default visibility mode (private); Member function definition: inside class definition and outside class definition using scope resolution operator (::); Declaration of objects as instances of a class; accessing members from object(s), Array of type class, Objects as function arguments - pass by value and pass by reference;

Constructor and Destructor:

Constructor: Special Characteristics, Declaration and Definition of a constructor, Default Constructor, Overloaded Constructors, Copy Constructor, Constructor with default arguments;

Destructor: Special Characteristics, Declaration and definition of destructor;

Inheritance (Extending Classes): Concept of Inheritance, Base Class, Derived Class, Defining derived classes, protected visibility mode; Single level inheritance, Multilevel inheritance and Multiple inheritance, Privately derived, Publicly derived and Protectedly derived class, accessibility of members from objects and within derived class(es);

Data File Handling:

Need for a data file, Types of data files – Text file and Binary file;

Basic file operations on text file: Creating/Writing text into file, Reading and Manipulation of text from an already existing text File (accessing sequentially);

Binary File: Creation of file, Writing data into file, Searching for required data from file, Appending data to a file, Insertion of data in sorted file, Deletion of data from file, Modification of data in a file;

Implementation of above mentioned data file handling in C++;

Components of C++ to be used with file handling:

Header file: fstream.h; ifstream, ofstream, fstream classes;

Opening a text file in **in**, **out**, and **app** modes;

Using cascading operators for writing text to the file and reading text from the file; **open()**, **get()**, **put()**, **getline()** and **close()** functions; Detecting end-of-file (with or without using **eof()** function);

Opening a binary file using **in**, **out**, and **app** modes;

open(), **read()**, **write()** and **close()** functions; Detecting end-of-file (with or without using **eof()** function); **tellg(), tellp(), seekg(), seekp()** functions

Pointers:

Declaration and Initialization of Pointers; Dynamic memory allocation/deallocation operators: **new, delete;** Pointers and Arrays: Array of Pointers, Pointer to an array (1 dimensional array), Function returning a pointer, Reference variables and use of alias; Function call by reference. Pointer to structures: Deference operator: *, ->; self referencial structures;

UNIT 2: DATA STRUCTURES

Arrays:

One and two Dimensional arrays: Sequential allocation and address calculation;

One dimensional array: Traversal, Searching (Linear, Binary Search), Insertion of an element in an array, deletion of an element from an array, Sorting (Insertion, Selection, Bubble sort), concatenation of two linear arrays, merging of two sorted arrays;

Two-dimensional arrays: Traversal, Finding sum/difference of two NxM arrays containing numeric values, Interchanging Row and Column elements in a two dimensional array;

Stack (Array and Linked implementation of Stack):

Operations on Stack (PUSH and POP) and its Implementation in C++, Converting expressions from INFIX to POSTFIX notation and evaluation of Postfix expression;

Queue: (Circular Array and Linked Implementation):

Operations on Queue (Insert and Delete) and its Implementation in C++.

UNIT 3: DATABASES AND SQL

Database Concepts:

Relational data model: Concept of domain, tuple, relation, key, primary key, alternate key, candidate key;

Relational algebra: Selection, Projection, Union and Cartesian product;

Structured Query Language:

General Concepts: Advantages of using SQL, Data Definition Language and Data Manipulation Language;

Data types: NUMBER, CHARACTER, DATE;

SQL commands:

CREATE TABLE, DROP TABLE, ALTER TABLE, UPDATE...SET..., INSERT, DELETE;

SELECT, DISTINCT, FROM, WHERE, IN, BETWEEN, GROUP BY, HAVING, ORDER BY;

SQL functions: SUM, AVG, COUNT, MAX and MIN;

Note: Implementation of the above mentioned commands could be done on any SQL supported software.

UNIT 4: BOOLEAN ALGEBRA

Binary-valued Quantities, Boolean Variable, Boolean Constant and Boolean Operators: AND, OR, NOT; Truth Tables; Closure Property, Commutative Law, Associative Law, Identity law, Inverse law, Principle of Duality, Idem potent Law, Distributive Law, Absorption Law, Involution law, DeMorgan's Law and their applications;

Obtaining Sum of Product (SOP) and Product of Sum (POS) form from the Truth Table, Reducing Boolean Expression (SOP and POS) to its minimal form, Use of Karnaugh Map for minimisation of Boolean expressions (up to 4 variables);

Basic Logic Gates (NOT, AND, OR, NAND, NOR) and their use in circuits.

UNIT 5: COMMUNICATION AND NETWORK CONCEPTS

Evolution of Networking: ARPANET, Internet, Interspace;

Different ways of sending data across the network with reference to switching techniques;

Data Communication terminologies: Concept of Channel, Baud, Bandwidth (Hz, KHz, MHz) and Data transfer rate (bps, kbps, Mbps, Gbps, Tbps);

Transmission media: Twisted pair cable, coaxial cable, optical fiber, infrared, radio link, microwave link and satellite link.

Network devices: Modem, RJ45 connector, Ethernet Card, Hub, Switch, Gateway;

Different Topologies- Bus, Star, Tree; Concepts of LAN, WAN, MAN;

Protocol: TCP/IP, File Transfer Protocol (FTP), PPP, Level-Remote Login (Telnet), Internet, Wireless/Mobile Communication, GSM, CDMA, WLL, 3G, SMS, Voice mail, Application Electronic Mail, Chat, Video Conferencing;

Network Security Concepts: Cyber Law, Virus threats and prevention, Firewall, Cookies, Hacking;

WebPages; Hyper Text Markup Language (HTML), eXtensible Markup Language (XML); Hyper Text Transfer Protocol (HTTP); Domain Names; URL; Protocol Address; Website, Web browser, Web Servers; Web Hosting.

Class XII (Practicals)

Duration: 3 hours **Total Marks: 30**

1. Programming in C++ **10**

One programming problem in C++ to be developed and tested in Computer during the examination. Marks are allotted on the basis of following:

Logic	:	5 Marks
Documentation/Indentation	:	2 Marks
Output presentation	:	3 Marks

Notes: The types of problems to be given will be of application type from the following topics

- Arrays (One dimensional and two dimensional)
- Array of structure
- Stack using arrays and linked implementation
- Queue using arrays (circular) and linked implementation
- Binary File operations (Creation, Displaying, Searching and modification)
- Text File operations (Creation, Displaying and modification)

2. SQL Commands **05**

Five Query questions based on a particular Table/Reaction to be tested practically on Computer during the examination. The command along with the result must be written in the answer sheet.

3. Project Work **05**

The project has to be developed in C++ language with Object Oriented Technology and also should have use of Data files.

- Presentation on the computer
- Project report (Listing, Sample, Outputs, Documentation)
- Viva

4. Practical File **05**

Must have minimum 20 programs from the following topics

- Arrays (One dimensional and two dimensional, sorting, searching, merging, deletion'& insertion of elements)
- Arrays of structures, Arrays of Objects
- Stacks using arrays and linked implementation
- Queues using arrays (linear and circular) and linked implementation
- File (Binary and Text) operations (Creation, Updation, Query)
- Any computational based problems

15 SQL commands along with the output based on any table/relation: 3 Marks

5. Viva Voce **05**

Viva will be asked from syllabus covered in class XII and the project developed by student.

GUIDELINES FOR PROJECTS (Class XI and XII)

1. Preamble

1.1 The academic course in Computer Science includes one Project in each year. The Purpose behind this is to consolidate the concepts and practices imparted during the course and to serve as a record of competence.

1.2 A group of two students/three students as team may be allowed to work on one project.

2. Project content

2.1 Project for class XI can be selected from one of the topics given in event programming (or.)

2.2 Project for class XII should ensure the coverage of following areas of curriculum:

a. Problem Solving

b. Data Structure

c. Object Oriented Programming in C++

d. Data File Handling

Theme of the project can be

- Any subsystem of a System Software or Tool
- Any Scientific or a fairly complex algorithmic situation.
- Business oriented problems like Banking, Library information system, Hotel or Hospital management system, Transport query system
- Quizzes/Games;
- Tutor/Computer Aided Learning Systems

2.3 The aim of the project is to highlight the abilities of algorithmic formulation, modular programming, optimized code preparation, systematic documentation and other associated aspects of Software Development.

2.4 The assessment would be through the project demonstration and the Project Report, which should portray Programming Style, Structured Design, Minimum Coupling, High Cohesion, Good documentation of the code to ensure readability and ease of maintenance.

Reference Books

Computer Organisation and Boolean Algebra

1. Rajaraman, FUNDAMENTALS OF COMPUTERS 4th Edition, Prentice Hall of India.

2. Peter Norton, INTRODUCTION TO COMPUTER 4th Edition, Tata McGraw Hill

3. J. Shelly & Roger Hunt, COMPUTER STUDIES, Wheeler's Publication.

4. C.S. French, COMPUTER STUDIES, Arnold Publishers.
5. Thomas C. Bartee, DIGITAL COMPUTER FUNDAMENTALS, McGraw Hill International.

Problem Solving and Programming in C++

Note: Prior knowledge of C is not required in the learning of C++, eventhough reference about C are made in some of the books.

1. Robert Lofore, OBJECT ORIENTED PROGRAMMING IN TURBO C++, Galgotia Publications Pvt. Ltd.
2. David Parsons, OBJECT ORIENTED PROGRAMMING WITH C++, BPB Publications.
3. Bjarne Stroutrup, THE C++ PROGRAMMING LANGUGE, Adison Wesley.
4. AI Stevens, TEACH YOUR SELF C++ TECHNIQUES & APPLICATIONS, BPB Publications.
5. Scott Robbert Ladd, TURBO C++ TECHNIQUES & APPLICATIONS, BPB Publications.

Operating Environment

1. Ritchi, Operating Systems, BPB Publications.
2. James L. Peterson & Abraham S., OPERATING SYSTEM, Addison-Wesley Publishing Company.

Data Structures

1. M.A. Weiss, Data Structures and Algorithm Analysis in C++. the Benjamin/Cummings Pub. Co., Inc.
2. Scott Rober Ladd, C++ COMPONENTS AND ALGORITHMS, BPB Publications.

Database Management System and SQL

1. Martin Gruber, UNDERSTANDING SQL, BPB Publications.
2. Sheldon M. Dunn x Base Cross Reference Handbook, First Authorised Asian Edition 93, Tech. Publications Pvt. Ltd.
3. C.J. Data, DATABASE PRIMER, Adison Wesley.

Computer Network

1. A.S. Tanenbaum, Computer Network 4th Edition, Prentice Hall of India P.Ltd.
2. Williams Stalling, Data Communication and Networks 5th Edition, Prentice Hall of India P. Ltd.
3. Hancock, Network Concept and Architectures, BPB Publications.

Reference Magazines

PC WORLD, COMPUTERS TODAY, PC QUEST, DATA QUEST, COMPUTER WORLD.

Reference Manuals

OPERATING SYSTEM MANUAL, C++ COMPILER MANUAL

15. Informatics Practices (Code 065)

Learning Objectives:

1. To understand the application development environm-ent.
2. To gain programming Skills in GUI Programming Tool and Database Creation in RDBMS.
3. To design, program and develop database application using GUI Programming Tool and RDBMS.
4. To learn database connectivity using Visual Basic as Front-end tool.
5. To develop ability to use the Open Source Technology.

Competencies:

1. Student will become familiar with Application Development
2. Student will be able to develop & debug programs Independently.
3. Student can use SQL for storing and retrieving data from the RDBMS.
4. Ability to arrive at a normalized design of tables and other database objects in RDBMS.
5. Student will be able to develop a Client Server Application using Front end and Back end tools.

Class XI (Theory)

Duration: 3 hours **Total Marks: 70**

Unit No.	Unit Name	Marks
1.	COMPUTER SYSTEM AND BUSINESS APPLICATIONS	10
2.	INTRODUCTION TO PROGRAMMING	30
3.	RELATIONAL DATABASE MANAGEMENT SYSTEM	30
		70

UNIT 1: COMPUTER SYSTEM AND BUSINESS APPLICATIONS

Evolution of computers; Basics of computer and its operation: Functional Components and their inter-connections, concept of Booting;

Hardware concepts:

Diagram illustrating main parts of computers;

Central Processing Unit (CPU): Arithmetic Logic Unit (ALU), Control Unit, Memory Unit (RAM - Random Access Memory & ROM - Read Only Memory)

Role of Input, Processing and Output Devices in a computer system

Input devices: Keyboard, Mouse, Light pen, Touch Screens, Graphics Tablets, Joystick, Mic, MICR, OCR, Scanner, Smart Card reader, Barcode reader, Biometric sensor, web camera, digital camera;

Output Devices: Monitor/Visual Display Unit (VDU), Printer (Dot Matrix Printer, Desk jet/ Ink jet/ Bubble jet Printer, Laser Printer), Plotter, Speaker,

Secondary Storage Devices: Floppy Disk, Hard Disk, Compact Disk, Magnetic Tape, Digital Video Disk (DVD), Zip Drive; Units of Memory: Bit (Binary Digit), Byte, Kilobyte, Megabyte, Gigabyte.

Software Concepts:

Types of Software: System Software, Utility Software and Application Software.

System Software: Operating System, Language Compilers, Interpreters and Assembler;

Operating System: Need of operating systems, Functions of Operating System Types of operating system.

Utility Software: Compression tools, Anti Virus, File Management tools and Disk Management tools;

Application Software as a tool: Word Processor, Presentation Tool, Spreadsheet Package, Database Management System; Business software (for example: Inventory Management System, Payroll System, Financial Accounting, Hotel Management, and Reservation System);

Development of programming languages - Machine Language, Assembly Language, High Level Language (BASIC, COBOL, FORTRAN, PASCAL, C++); GUI based languages - Visual Basic, Visual C++; C#, Java, vb.net.

GUI Operating System

Important: *Students/Teachers can also perform similar operation on any operating system. It is advised that the teacher while using any one operating system, give a demonstration of equivalent features for the other operating system.*

Windows

General features, Elements of Desktop - Taskbar, Icon, Start button, Shortcuts, Folder, Recycle Bin, My Computer;

Start Menu: Program, Documents, Settings, Find/Search, Help, Run, Shut Down/Logoff;

Customization of Taskbar, start menu, Display properties (Wallpaper, Font Settings, Color Settings, Screen Savers);

Program Menu: Accessories - Calculator, Notepad, Paint, Word pad, Entertainments (CD Player, Sound Recorder, Media Player, Volume Controller); Internet Browsers – Mozila Firefox, Internet Explorer, Netscape Navigator.

Control Panel: Add new hardware; Add new Software, Printer Installation, Date/Time, Mouse, and Regional Settings;

Documentation

Purpose of using word processing software, opening a new/existing document, closing a document, typing in a document, saving a document, print preview, printing a document, setting up of page as per the specifications, selecting a portion of document, copying selected text, cutting selected text, pasting selected text; changing font, size, style, color of text; Inserting symbol; Formatting: Alignment – Left, Right, Center; Justification;

Industries and Business Computing: Types of Industries (Production, Shipping, Travel, Hotel, Insurance, Construction, Automobile), Applications of Business Computing in Industries.

UNIT 2: INTRODUCTION TO PROGRAMMING

Programming Methodology:

General Concepts; Modular approach; Stylistic Guidelines: Clarity and Simplicity of Expressions, Names, Comments, Indentation; Documentation and Program Maintenance; Running and Debugging programs, Syntax Errors, Run-Time Errors, Logical Errors;

Problem Solving Methodology and Techniques: Understanding of the problem, Identifying minimum number of inputs required for output, Step by step solution for the problem, breaking down solution into simple steps, Identification of arithmetic and logical operations required for solution, Using Control Structure: Conditional control and looping (finite and infinite);

Programming Tool: Visual Basic

Introduction to Programming – Modular Programming, Object Oriented Programming, Event Driven Programming;

About Visual Basic (Object Based Programming Language), Rapid Application Development using Visual Basic; Concept of Project in Visual Basic, VB Project Options - Standard EXE, ActiveX DLL, ActiveX EXE, ActiveX Control, ActiveX Document DLL, ActiveX Document EXE, Addin, VB Application Wizard, IIS Application, DHTML Application;

Getting Familiar with Visual Basic User Interface - Pull-Down menus, Toolbar, Toolbox, Project Explorer, Properties Window, Form Layout window, Form, Immediate window;

Opening and Closing windows, Resizing and moving windows, Docking windows; Quitting Visual Basic;

Visual Basic Tool Box (Standard Window Controls) - Pointer, Picture Box, Label, Text Box, Frame, Command Button, Check Box, Option Button, Combo Box, List Box, Horizontal Scrollbar, Vertical Scrollbar, Timer, Drive List box, Directory List box, File List box, Shape, Line, Image, Data, OLE; Object Naming Conventions, Event Procedures;

Programming Fundamentals

Data Types: Integer, Long, Single, Double, Currency, String, Byte, Boolean, Date, Object, Variant; Variables: Need to use variable, Declaring Variables, Variable Naming Convention, Assigning value to Variables, Data Types of variable, Scope and lifetime of Variables (Public and Private); Control Structures:

Decision Structure – IF, IF-THEN-ELSE, Select Case;

Looping Structure- Do While…Loop, Do…Loop While, For…Next, For Each…Next;

Menu Editor: Concept of Menus, Shortcut menus and Popup menus Designing Menu System, Menu Editor Dialog Box Options (Name, Index, Shortcut, HelpContextID, NegotiatePosition, Checked, Enabled, Visible, WindowList, Right Arrow, Left Arrow, Up Arrow, Down Arrow, Menu List, Next, Insert, Delete, OK, Cancel), To Create Menu Controls in the Menu Editor, Menu Naming Conventions, Setting the Name Property, Creating a Menu Control Array, Creating Sub Menus, Separating Menu Controls, Assigning Access Keys and Shortcut Keys, Controlling Menus at Runtime-Enabling and Disabling Menu Commands, Displaying a Checkmark on a Menu Control, Making a Menu Control Invisible, Adding Menu Control at Runtime, Displaying Pop-Up Menu;

General Controls (Advance): Image List, Common Dialog Box, ADO DC, DB Combo, Media Player Control, DB Grid;

Adding a Toolbar: Creating an Image List, Adding Images to the Toolbar, To Add Code for the Toolbar Buttons;

Adding Status Bar: Adding Status Bar panels, Adding Time on the panel.

Dialog Boxes: Pre-defined dialog box, Custom dialog box;

UNIT 3: RELATIONAL DATABASE MANAGEMENT SYSTEM

Database Management System

Introduction to database concepts: relation/Table, attribute, Tuple / Rows, field, Data, Concept of String, Number and Date values, Data type and Data Integrity (Domain and Referential

Integrity). Candidate key, Alternate key, Primary Key, Foreign Keys; Data Normalization-first, second, third, BCNF normal form;

Examples of Commercially available Database Management System's (Back-End) – Oracle, MS-SQL Server, DB2, MySQL, Sybase, INGRES.

Examples of Front End Software's: Oracle Developer, Visual Basic, Visual C++, Power Builder, Delphi;

RDBMS Tool :

Interface with Oracle, Login Screen, Entering Name and Password; Classification of SQL Statements: DML (SELECT, INSERT, UPDATE, DELETE), DDL (CREATE, DROP, ALTER, RENAME, TRUNCATE), DCL (GRANT, REVOKE), TCL (COMMIT, ROLLBACK); SQL SELECT Statement: SQL SELECT statement, Selecting All the Columns, Selecting Specific Column, Column Heading Default, Using Arithmetic Operators, Operator Precedence, Significance of NULL value, NULL values in Arithmetic Expressions, Defining and using Column Alias, Concatenation Operator (||), Duplicate rows and their Elimination (DISTINCT keyword), Role of SQL and SQL*Plus in interacting with RDBMS, Displaying Table Structure (DESC command);

SELECT Statement Continued: Limiting Rows during selection (using WHERE clause), Working with Character Strings and Dates, Using Comparison operators, BETWEEN Operator, IN Operator, LIKE Operator, IS NULL Comparison, Logical Operators, Use of Logical Operators (AND/OR/NOT Operators), Logical Operator Precedence, ORDER BY Clause, Sorting in Ascending/Descending Order, Sorting By Column Alias Name, Sorting On Multiple Columns;

Functions: SQL Functions, Types of SQL Function (Single Row/Multiple Row), Single Row SQL Functions, Character Functions (Case Conversion/Character Manipulation), Case Conversion Functions (lower (), InitCap (), UPPER ()) Character Manipulation Function (CONCAT(), INSTR(), LENGTH(), TRIM(), SUBSTR(), LPAD()), Number Functions (ROUND(), TRUNC(), MOD()), Working with Dates (LAST_DAY(), MONTHS_BETWEEN(), NEXT_DAY(), ADD_MONTHS(), ROUND(), TRUNC()) Arithmetic Operation on Dates, Date Functions and their Usage, Data type Conversion Functions, Implicit and Explicit Conversion, TO_CHAR Function with Dates, TO_CHAR Function For Numbers, TO_NUMBER and TO_DATE Functions, NVL Function and its Usage, DECODE Function and its Usage;

Grouping Records: Concept of Grouping Records and Nested Grouping, Nested Grouping of records, Group Functions, Types of group functions (MAX(), MIN(), AVG(), SUM(), COUNT()), Using AVG and SUM Functions, Using MIN and MAX Functions, Using the COUNT Function, using COUNT(*), DISTINCT clause with COUNT, Group Functions and Null Values, Using NVL Function with Group Functions, Grouping Records: Group By Clause, Grouping By More than One Column, Illegal Queries with Group By Clause, Excluding Group Results: Having Clause, Nesting Group Functions,

Sub Queries: Concept of Sub-Query, Sub Query to Solve a Problem, Guidelines for Using Sub Queries, Types of Sub-Queries (Single Row and Multiple Row) and (Single Column and Multiple Column); Single Row Sub-Query and its Execution;

Displaying Data From Multiple Tables: Concept of Join, Result of Join, Cartesian Product and Generating Cartesian Product example using Mathematical Set), Types Of Joins (EQUI, SELF, NON-EQUI, OUTER (LEFT and RIGHT)), Equi-join: Retrieving Records with Equi-join, Additional Search Conditions using AND operator, Short Naming Convention for Tables (Table Aliases), Non-Equi join and its Implementation, Outer-Join and Its Usage, Self-Join (Joining a table to Itself);

Manipulating Data of A Table/Relation: Concept of DML (Data Manipulation Language), INSERT Statement, Inserting New Rows, Inserting New Rows with Null Values, Inserting Date Values, Use of Substitution Variable to Insert Values, Copying Rows From Another Table, Update Statement to Change Existing Data of a Table, Updating Rows In A Table, Updating Rows Based on Another Table, Delete statement/ Removing Row/Rows from a Table, Deleting Rows Based on condition from another Table; Making Data Manipulation Permanent (COMMIT). Undo Data Manipulation Changes (ROLLBACK)

Database Objects: View, Table, Sequence, index, and Synonyms, DDL (Data Definition Language), Naming Convention, Creating Views, Creating Synonyms, Simple Views and Complex Views, Retrieving Data From a View, Querying a View, Modifying a View,

Including Constraints: Constraints, Concept of using Constraints, Constraint Guidelines, Defining Constraints, NOT NULL, UNIQUE KEY, PRIMARY KEY, FOREIGN KEY, FOREIGN KEY Constraint Keywords, CHECK, Adding a Constraint, Dropping a Constraint, Disabling Constraints, Enabling Constraints, Viewing Constraints, Viewing The Columns, Associated with Constraints;

Creation of a Table/Relation: CREATE TABLE Statement, Data types, The DEFAULT option, Creating Tables, Referencing Another User's Tables, Querying the Database Dictionary to view all tables in the Oracle Database, Creating a Table by Using a Sub-Query;

Managing Existing Tables and other Database Objects: The ALTER TABLE Statement, Adding a New Column in a Table, Modifying Existing Column, Dropping a Column, Renaming an Object, Truncating a Table, Adding Comments to a Table, Dropping Views, Dropping Synonyms, Dropping Tables; giving permission to other users to work on Created Tables and Revoking it (GRANT and REVOKE statement).

Informatics Practices (Code 065)

Class XI (Practical)

Duration: 3 Hours **Total Marks: 30**

1. Hands on Experience **15**

A problem should be given covering the following

- Table definition (The table must include constraints)
- A form with Label, Text, Command Button control, List Box, Drive List Box, Directory List Box, File List Box, Tool and Menu Bar (Any 4)
- DSN to access tables in the database
- For data connectivity (Activex Database Control)
- Change of Text box Control Properties to view Database fields

2. Practical File **05**

The practical file should contain print outs from each of the following topics.

1. Create an application using Visual Basic with a Text Box control to accept a name from the user and print "Hello <Name>" in a message box. E.g. when user types his name as "Kamal Kant" in the text box and clicks OK button, a message "Hello Kamal Kant should be displayed and if he clicks on Cancel button a message as "Bye Kamal Kant" should appear.
2. Create an Application having two Text Boxes on the Window. Get Title, First Name and Last Name in it. On clicking Ok button a message should appear by joining Title + First Name + Last Name. e.g. if user enters Prof. in Title, Rajyash in First Name, and Swami as Last Name then the message to be printed should be " Happy Deepawli Prof. Rajyash Swami".
3. Create an application to let user guess any number and click a Play button given on the form. On clicking the Play button the application will generate a random number. If the generated number is same as guessed by the user then display a message "You Win" otherwise display a message "You Lose".
4. Create an application to Display Image files kept in different folders in the system. The application should allow the user to navigate in the folders and list all Image Files (*.BMP, *.JPG) when ever a image file is selected it should get that picture displayed in an Image control.
5. Create an application having menu bar and tool bar to create a text file, navigate and open text files, edit text file and save changes made by the user.
6. Create a small application working as a general purpose calculator.(+, -, x, ÷)
7. SQL assignments (based on Demo Tables present in the ORACLE database for example Emp table, Dept table and SalGrade table):

- Display all the records (all columns) from table Emp.
- Display EmpNo and EName of all employees from table Emp.
- Display Ename, Sal and Sal added with Comm from table Emp.
- Display EName joined with Job with heading "Employee", Sal*12 as "Total Salary" from table Emp.
- Display distinct Sal of employees from table Emp..
- Show the Structure of table Dept
- Write a query to display EName and Sal of Employees whose salary is greater than or equal to 3000 from table Emp.
- Write a Query to display employee name, salary and department number who are not getting commission from table Emp.
- Write a Query to display employee Number, name, sal and sal*12 as Annual Salary whose commission is not NULL from table Emp.
- Write a Query to display employee name and salary of those employee who don't have there salary in the range of 1500 to 2000
- Write a Query to display name, job, salary, and HireDate of employees who are hired between February 20, 1981, and May 1, 1981. Order the query in ascending order of HireDate.
- Write a Query to display the name and hire date of all employees who were hired in 1982.
- Write a Query to display the name, job title and salary of employee who do not have manager.
- Write a Query to display the name of employee whose name contains 'A' as third alphabet.
- Write a Query to display the name of employee whose name contains 'T' as the last alphabet.
- Write a Query to display the name of employee whose name contains 'M' as first alphabet 'L' as third alphabet.
- Write a Query to display the name of employee who is having 'L' as any alphabet of the name.
- Write a query to display the current system date.
- Write a Query to display employee number, name, salary, salary increase by 15% expressed as a whole number. Label the column as New Salary.
- Write a Query to display the employee's name and salary review date, which is the date after six months of HireDate.
- Write a Query to display the employee's name and salary review date, which is the date after six months of HireDate in format of 'Sunday, 7 SEP, 1981'.
- For each employee display employee name and total number of weeks lapsed between HireDate and Today.
- For each employee display employee name and total number of days lapsed between Hire Date and Today.

- Create a query that produces display in the following format
  <employee name> Earns $<salary> Monthly and working as <Job >
- Write a query which displays the employee name with the first letter capitalized and all other letters lower case and length of there name string.
- Write a Query to to display the employee name and commission amount. If the employee does not earn commission, put "No Commission".
- Write a query to display the grade of all employees based on the value of the column job as per following scheme:

JOB	**GRADE**
PRESIDENT	A
MANAGER	B
ANALYST	C
SALESMAN	D
CLERK	E
NONE OFTHE ABOVE	O

- Write a query to display the EName and DeptNo and DName for all employees using tables Emp and Dept.
- Write a Query to display employee name, department name and location of all employees who have manager number between 7500 and 7900.
- Write a Query to display the employee name, department number and all the employees that worked in the same department as a given employee.
- Write a Query to display employee name and HireDate of employees who are employed after Employee 'BLAKE'.
- Write a Query to display employee number, name and manager's name with their manager number.
- Write a Query to Display the Sum, Average, Highest and Lowest salary of the employees.
- Write a Query to Display the Sum, Average, Highest and Lowest salary of the employees grouped by department number.
- Write a Query to Display the Sum, Average, Highest and Lowest salary of the employees grouped by department number and sub-grouped by job.
- Write a query to display the number of employee with same job.
- Write a query to display the average of Highest and lowest salary of each department.
- Write a query to display the difference of Highest and lowest salary of each department having maximum salary > 4000.
- Write a query to display the employee name and job for all employee in the same department as 'ALLEN'· Write a query to display employee name and salary of those who either work in department 10 or have salary greater than employee 7521.

Before the following exercise please ensure that you are provided with a table Employee with following description

Table: Employee

Name of Column		Type
ID	NUMBER	(4)
First_Name	VARCHAR2	(30)
Last_Name	VARCHAR2	(30)
User_ID	VARCHAR2	(10)
Salary	NUMBER	(9,2)

- Use DESCRIBE command to ensure the table structure.
- Add the following data in the above Table as instructed

ID	First_Name	Last_Name	User_ID	Salary
1	Dim	Joseph	Jdim	5000
2	Jagannath	Mishra	jnmishra	4000
3	Siddharth	Mishra	smishra	8000
4	Shankar	Giri	sgiri	7000
5	Gautam	Buddha	bgautam	2000

- Populate table with first record mentioning the column list in the insert clause.
- Populate table with next two records without mentioning the column list in the insert clause.
- Populate table with 4th record and enter only ID and First_Name
- Populate table with 5th record and enter ID, User_ID, and Last_Name only.
- For record with ID = 4 update record with Last_Name User_ID and Salary.
- For record with ID = 5 update records with First_Name and Salary.
- Make the changes permanent.
- Modify the Last_Name, of the employee 3, to Gautam.
- Modify the Salary and increase it by 1000, for all who get salary less then 5000.
- Delete the employee record having First_Name as Siddharth.
- Make the changes permanent.
- Remove the entire contents of the table
- Undo the above step.
- Create a table Employee1 with columns ID, First_Name and Dept_ID from table Employee and also confirm the existence of table Employee1
- Create a view VU_Emp1 which should include column EmpNo, EName and Dept No from the table Emp.
- Create a view VU_Emp2 which should include column EmpNo, EName and Dept No from the table Emp and change the column headings as EmpNumber, Employee, Department.

- Select VIEW_NAME and TEXT from the data dictionary USER_VIEWS.
- Create the table Department table based on the following table instance chart.

Column Name	ID	Name
Data Type	NUMBER	VARCHAR2
Length	8	25

- Populate the table Department with data from table dept. Including only required columns.
- Create the table Employee based on the following table instance chart.

Column Name	ID	First_Name	Last_Name	Dept_ID
Data Type	NUMBER	VARCHAR2	VARCHAR2	NUMBER
Length	8	25	25	8

- Rename table Employee1 to Employee2.
- Drop table Employee2.
- Drop table Employee and Department
- Create table Customer as per following Table Instance Chart.

Column Name	Cust_ID	Cust_Name	Cust_Add1	Cust_Add2	Pincode	Cust_Phone
Key Type						
Nulls/Unique						
Fk Table						
Fk Column						
Datatype	number	varchar2	varchar2	varchar2	number	varchar2
Length	7	30	20	30	6	10

- Add one column Email of data type VARCHAR2 and size 30 to the table Customer.
- Change the data type of column pincode to VARCHAR2(10) in the table Customer.
- Add one more column CustomerIncomeGroup of datatype VARCHAR2(10).
- Insert few records with relevant information, in the table.
- Drop the column CustomerIncomeGroup from table Customer.
- Create table Department as per following Table Instance Chart.

Column Name	DeptID	DeptName	DeptLocation
Key Type	Primary		
Nulls/Unique		NOT NULL	
Fk Table			
Fk Column			
Datatype	NUMBER	VARCHAR2	VARCHAR2
Length	2	20	20

- Create table Employee as per following Table Instance Chart.

Column Name	EmpID	EmpName	EmpAdd	Phone	EmpSal	DeptID
Key Type	Primary Foreign					
Nulls/Unique		NOT NULL				
Fk Table						Department
Fk Column						Dept_ID
Datatype	number	varchar2	varchar2	varchar2	number	varchar2
Length	6	20	30	10	9,2	2

- Create table Employee1 as per the above Table Instance Chart but now use table level primary key addition method.
- Create table Employee2 as per the above Table Instance Chart without any constraint while table creation.
- Add a PRIMARY KEY constraint to the table Employee2 using the EmpID column.
- Add a FOREIGN KEY reference on the Employee2 table that will ensure that employee records with nonexistent departments are to be prohibited.
- Confirm that constraints were added by querying Constraint_Name and Constraint from USER_CONSTRAINTS relation.
- Add a NOT NULL constraint to the table Emploee2 on column EmpName.
- Add a CHECK constraint to ensure, at the time of record insertion, that employee records with salary less than 2000 are to be prohibited.
- Disable NOT NULL Constraint on the column EmpName from the table Employee2
- Drop UNIQUE constraint from the column DeptName in table Department

8. Create an application to list all the contents of a database table using a data control object in visual basic.

9. Create an Application in Visual basic having Menu Bar tool bar and other controls to View, Add and Modify records present in the Database Tables.

3. Project 05

The following case study is to be used to develop a team project.

A cable company in Delhi is working since 1998. They have about 2 Lac customers in different zones (North, South, East, and West). Company wants to computerise its working, which involves Customer Registration, Customer Billing, and Bill Collection on monthly basis.

Develop a Database Handling Software for the company. The software should have option to enter customer data and information of bill collection. The data entry form should also have option to navigate through the records.

The software should allow to store following information of customer and billing (Normalize this to store data in tabular form).

Customer Name

Customer Address

Customer City

Customer Zone

Customer Pin Code

Customer Phone

Customer Interest (Movies, Games etc)

Customer Monthly Income

Customer Monthly Installment

Customer Joining Date

Bill Cycle

Bill Collection Date

(Suitable assumptions can be made)

The user interfaces should be designed in visual basic and must be user friendly with correct tab order.

Note: Similar type of cases can also be encouraged, provided it should include almost every aspect of course undertaken.

4. Viva Voce 05

Five questions from topics covered in the curriculum

Class XII (Theory)

Duration: 3 hours **Total Marks: 70**

Unit No	Unit Name	Marks
1.	BUSINESS COMPUTING	10
2.	PROGRAMMING	30
3.	RELATIONAL DATABASE MANAGEMENT SYSTEM	30
		70

UNIT 1: BUSINESS COMPUTING

Introduction to Open Source based software:

Terminology: OSS, FLOSS, GNU, FSF, OSI, W3C.

Definitions: Open Source Software, Freeware, Shareware, Proprietary software, Localisation, UNICODE

Softwares : Linux, Mozilla web browser, Apache server, MySQL, Postgres, Pango, OpenOffice, Tomcat, PHP, Python

Websites: www.sourceforge.net, www.openrdf.org, www.opensource.org, www.linux.com, www.linuxindia.net, www.gnu.org.

General concepts, User interfaces (Front End), Underlying Database (Back End), Integration of User Interface and Database;

More application areas of Databases:

Inventory control, Financial Accounting, Pay-Accounting System, Invoicing Management System, Personal Management System / HRD System, Fees Management system, Result Analysis System, Admission Management System, Income Tax Management System;

Advanced Program Development Methodology: System Development Life Cycle, Relational Database Concept, Relational Database, Management System, Data Models (Entity Relationship Model), Entity and Entity Set, Attributes (Single, Composite and Multi-Valued), Relationship (One-to-One, One-to-Many and Many-to-Many), Entity Relationship Modeling Conventions, Communicating with an RDBMS using SQL, Relational Database Management System, SQL Statements, About programming language in SQL.

Data Dictionary, Data Warehousing, Data Mining, Meta Data;

Object Modeling: Introduction to object oriented modeling using Unified Modeling Language (Concepts only).

Client Server Computing: Concept of Client Server Computing.

UNIT 2: PROGRAMMING: Visual Basic

Review of Class XI;

Programming Fundamentals

Modules: Modules in Visual Basic- Form Modules, Standard Modules, and Class Modules;

Procedures: Procedures (General, Event, Function, Property);

Control Structures:

Revision of Decision Structure – IF, IF-THEN-ELSE, Select Case;

Revision of Looping Structure- Do While…Loop, Do…Loop While, For…Next, For Each…Next;

Functions: Concept of Functions, Defining and Use of User Defined functions, function to perform calculations, Parameterized Functions;

Library Functions (System Functions)

String Function: Space( ), Str( ), Right( ), Left( ), Mid( ), InStr( ), Len( ), Ltrim( ), Rtrim( ), Ucase(), Lcase( ), String( );

Numeric Function: Sgn( ), Val( ), Int( );

Time-Related Function: Now( ), Time( ), Minute( ), Month( );

Miscellaneous Function: MsgBox( ), InputBox( );

Types of forms: Single Document Interface (SDI) and Multiple Document Interface (MDI);

MDI Applications: Creating MDI form and Child form, Arranging Child Forms**;**

Accessing database from ORACLE using ODBC or ADO or OLEDB to connect with database.

Data Control: Accessing Data with the Data Control, Using Data-Aware Controls, Using Data Control Properties – Database Name, Exclusive, Options, Read Only, Record Source, Data Control Methods – Refresh, UpdateControls, UpdateRecord; Bound Controls: Adding Bound Text and Bound Label Controls. Data-Bound list Boxes, Grids, and Sub-Forms

ADO (ActiveX Data Objects)**:** Connection Object, Command Object, and RecordSet Object, Special ADO Properties – Connection String (using single table), Command Text, Command Types, Cursor Locations, Cursor Types, Lock Types, Mode Types.

ADO Data Control: Simple Data linking using ADO Data Control Methods, ADO Data Control Events.

UNIT 3: RELATIONAL DATABASE MANAGEMENT SYSTEM

Review of RDBMS from Class XI

Database Fundamentals

Concept of Database Transaction, Committing a Transaction, Concept of "All or None" in a Transaction, Network Protocols Required (TCP/IP) for Data Communication, Stored Procedures, Concept of Database Fragmentation and Distributed Databases.

PL/SQL (Programming Language in SQL)

Importance of Writing Procedures, Declaring Variables: About PL/SQL, PL/SQL Block Structure, Program Constructs, Use of Variables, Handling Variables in PL/SQL, Types of Variables, Declaration, Naming Rules, Assigning Values to Variables, Initialization, and Keywords, Scalar Data types, Base Scalar Data Types, Scalar Variable Declaration, %TYPE attribute: for variable declaration, Declaring Boolean Variables, PL/SQL Record Structure, Referencing Non-PL/SQL variables, DBMS_OUTPUT.PUT_LINE;

Writing Executable Statements: PL/SQL Block Syntax and Guidelines, SQL functions in Code, SQL Functions in PL/SQL, PL/SQL Functions, Data type Conversion, Nested Blocks and Variable Scope, Operators in PL/SQL, Using Bind Variables, Programming Guidelines, Determining Variable Scope, SQL Statements in PL/SQL, Retrieving data in PL/SQL, Manipulating Data using PL/SQL, Inserting Data, Updating Data, Deleting Data, Naming Conventions, Commit and Rollback Statements, SQL Cursor, and Cursor Attributes;

Writing Control Structures: Controlling PL/SQL Flow of Execution, IF statements, IF-THENELSE Statement Execution Flow, IF-THEN-ELSIF Statement Execution Flow, Building Logical Conditions, Logic Tables, Boolean Conditions, Iterative Control: LOOP Statement, Basic Loop, FOR Loop, While Loop;

Creating Procedures: Overview of Procedures, Syntax for Creating Procedures, Developing Stored Procedures and its Advantages, Creating a Stored Procedure, Procedure Parameter Modes, Creating Procedures with Parameters, IN and OUT parameters and Usage, DEFAULT Option for Parameters, Removing Stored Procedures;

Writing Cursors: Introduction to Cursors (Implicit and Explicit), Explicit Cursor Functions, Controlling Explicit Cursors, Declaring, Opening and Closing the Cursor, Fetching data from the Cursor, Explicit Cursor Attributes (%ISOPEN, %NOTFOUND, %ROWCOUNT), controlling multiple fetches, Cursors and Records, Cursor FOR Loops, Cursor FOR Loops using Sub Queries.

Triggers: Types of Triggers: Row-Level Triggers, Statement Level Triggers, BEFORE and AFTER Triggers, INSTEAD of Triggers, Valid Trigger Type, Trigger Syntax, Combining Trigger Types, Enabling and Disabling Trigger, Replacing Trigger, Dropping a Trigger.

Development of Data Base Applications (Application Domain): Student database for school, Employee database for a company, Library Database for Library Student database management system for school, Employee database management system for a company, Library Database management system for Library, Railway Reservation System, Hotel Reservation, Inventory Control System;

Informatics Practices (Code 065)

Class XII (Practical)

Duration: 3 Hours **Total Marks 30**

1. Hands on experience **15**

A problem should be given covering the following features

1. Start a Standard Exe Project and it should contain MDI form with Menu Bar and Tool Bar (with Images)
2. Table structure in the database for the application with Constraints (Primary Key, Foreign Key, Check, and Unique).
3. A New Form to place an ADO component on it, for accessing data in table Stored Procedure to perform transactions/ conditional update
4. Trigger (any)
5. Making executable files of the project.

2. Records **05**

1. Create an Application using Visual Basic for Students Information System Having a Student Table in Relational Database and a Student Data Form in Visual Basic to enter data into the database.
2. Create an Application using Visual Basic for Criminals Information System Having a Criminal Table in Relational Database and a Criminals Data Entry Form in Visual Basic to enter data into the database. The Data entry form should contain form level and Field level checks using procedures.
3. Create an Application using Visual Basic for Nursing Home Automation System having Linked tables (for example: Patient, Employee, Bill) in Relational Database and a required Data Entry Forms in Visual Basic to enter data into the database. The Data entry form should contain form level and Field level checks using procedures. Use of Bound Controls and Sub-Forms are to be encouraged in this application.
4. Create a database handling application for Student Expert System. Following features are to be incorporated in the application:

a. Create following linked tables of Student in the Relational Database.

   i. StudentMaster : containing general information about the student.

   ii. StudentDetail: Table to store data having details such as Class, Section, Marks and other relevant information.

   iii. StudentFeeDetail: Should contain details like Financial Year, Class, Fee, FeeStatus(such as Paid and UnPaid)

   iv. Accounts: General Accounts table to store fee collection details such as received from, date, chequeno and other relevant information.

b. The database should have Procedures to update data, Insert data and to perform other database transactions.

c. Database triggers should also be defined wherever automatic data modification is required.

d. Visual basic forms for data entry.

e. Procedures in Visual Basic to perform Database Transactions and Commit changes made

f. Reporting tool to make the MIS reports, required to analyse data entry.

3. Project **05**

The following case study is to be adopted for the development of project

A book publishing company B R Publishing Group is in existence since1950. They were untouched with latest technological inventions. They are still using a traditional approach of bookkeeping and accounts maintenance.

A company, Nova technology, introduced themselves as system integrator and developers who can change existing working system into the latest concept of paper less office. They wanted few details from the company about its working. The details are as under:

- Name of the company is B R Publishing Group.
- The company is having 20 employees. One Managing Director, Two Managers (Work manager and Marketing Manager) and 17 employees who work as a team for book publishing.
- The company publishes books in different Indian languages and different topics.
- Every book involves an Author and its detail.
- The book is sold in the market at a variable discount options
- Book Seller: 30%
- Schools: 20%'
- Customer: 15%
- The company is maintaining information about Author and all its details such as Personal Information, Royalty etc.
- The company manages information about the book such as Book Name, Author, Quantity Sold, Quantity in Stock, etc.
- The company maintains Customer (Book Sellers) information. Books Sold, Subject, Language, and Amount Pending etc.
- Reports are required at different levels, such as
- Customer Listing
- Book Listing
- Language Wise Book Listing

- Topic Wise Book Listing
- Pending Amount Listing (Customer Wise, Book Wise)
- Author Royalty Detail
- Bill Generation etc.

As a developer you are required to design the project and develop it as per customer needs (Developer can also visit a publishing company to collect customer details and live data). Suitable assumptions can be made during implementation. A proper normalized database is to be maintained in the RDBMS and the front end is to be developed using advanced interface controls. User-friendly interface is to be generated.

Note: This is a sample case study. Similar type of cases can be developed on different application areas such as Library, Hospital, Transport Authority, Transporters, Wholesale Merchants, and Chemist Shops etc. The cases to be developed should preferably be obtained from live situations.

4. Viva Voce **05**

Five questions from topics covered in the syllabus

Reference Books:

- Mastering Visual Basic 6 – Petroutsos (BPB)
- Programming in Visual Basic 6 - Bay Ross (BPB)
- Visual Basic 6 Complete – Sybex (BPB)
- Successful Projects in Visual Basic – Christopher (BPB)
- Oracle8: The Complete Reference – George Koch, Kevin Loney (TMHP)
- Visual Basic Black Book (IDG)
- Programming in Visual Basic - McBride (BPB)
- Learn Oracle 8i – Ramalho (BPB)
- TEACH YOURSELF SQL / PL SQL USING ORACL 8i & 9i with SQL J – BAYROSS (BPB)
- Visual Basic and ORACLE SSI Press
- Oracle Programming with Visual Basic – Snowdon (BPB)
- Quan Book ‘O’ Level all Vol. – DOEACC (BPB)

16. Multimedia and Web Technology (Code 067)

Learning Objectives:

1. To get proficient in WEB Development using HTML/XML
2. To be able to write server & client scripts.
3. To get proficient in Web Management
4. To get proficient in creating Web Site
5. To design Graphical images using Image-Editing tools
6. To get proficient in audio & video capture and editing using software tools
7. To create and publish a self-contained multimedia CD-ROM using multimedia authoring tool.
8. To develop ability to use the Open Source Technology.
9. To develop ability to localize software applications.

Competencies:

The student will become proficient in the following:

1. Managing Self Developed web-site
2. Management of a full-fledged web portal
3. Creation & Editing of graphical images.
4. Capturing, Creating and Editing Audio and Video through external devices.
5. Embedding images & video into a presentation.

Class XI (Theory)

Duration: 3 hours **Total Marks: 70**

Unit No.	Unit Name	Marks
1.	COMPUTER SYSTEM	15
2.	WEB DEVELOPMENT	25
3.	WEB SCRIPTING	20
4.	MULTIMEDIA AND AUTHORING TOOLS	10

Unit 1: Computer System

Introduction to Computer, Input Devices – Keyboards, Mouse, Joy stick, Mic, Camera; Output Devices – Monitor, Printer, Speaker, Plotter; Memory Units – Byte, Kilobyte, Megabyte, Giga byte, tera byte; Primary Memory – RAM and ROM; Secondary Storage devices – Floppy Disk, Hard disk, CD ROM, DVD, Zip Drive, DAT Drive; Power devices – UPS; Software – System Software, Application Software, Utility Software; Working on computers – switching on computer, booting computer; icons, shortcuts, taskbar, mouse pointer; typing, saving and printing a simple text file, drawing simple picture using MSPaint, using calculator option, customizing desktop, windows explorer, managing folders (creating, moving, deleting, renaming); using floppy disk drive, using CD/DVD drives; managing files (copying, moving, deleting, renaming); playing audio and video;

GUI Operating System

Important: Students/Teachers can also perform similar operation on any operating system. It is advised that the teacher while using any one operating system, give a demonstration of equivalent features for the other operating system.

Windows

General features, Elements of Desktop - Taskbar, Icon, Start button, Shortcuts, Folder, Recycle Bin, My Computer;

Start Menu: Program, Documents, Settings, Find/Search, Help, Run, ShutDown/Logoff;

Customization of Taskbar, Start menu, Display properties (Wallpaper, Font Settings, Color Settings, Screen Savers);

Program Menu: Accessories - Calculator, Notepad, Paint, Word pad, Entertainments (CD Player, Sound Recorder, Media Player, Volume Controller);

Browsers: Mozila Firefox, Internet Explorer, Netscape Navigator;

Control Panel: Add new hardware; Add new Software, Printer Installation, Date/Time, Mouse, and Regional Settings;

Documentation

Purpose of using word processing software, opening a new/existing document, closing a document, typing in a document, saving a document, print preview, printing a document, setting up of page as per the specifications, selecting a portion of document, copying selected text, cutting selected text, pasting selected text; changing font, size, style, color of text; Inserting symbol; Formatting: Alignment – Left, Right, Center; Justification;

Unit 2: Web Development

WebPages; Hyper Text Transfer Protocol (HTTP); File Transfer Protocol (FTP) Domain Names; URL; Protocol Address; Website, Web browser, Web Servers; Web Hosting.

HTML/DHTML

Introduction, Objectives, Introduction to Universal Resource Identifier (URI) - Fragment Identifiers and Relative URI's, History of HTML, SGML, Structure of HTML/DHTML Document, Switching between opened Windows and browser (Container tag, Empty tag, Attribute);

Basic Tags of HTML: HTML, HEAD, TITLE, BODY (Setting the Fore color and Background color, Background Image, Background Sound), Heading tag (H1 to H6) and attributes (ALIGN), FONT tag and Attributes (Size: 1 to 7 Levels, BASEFONT, SMALL, BIG, COLOR), P, BR, Comment in HTML (<! >), Formatting Text (B, I, U, EM, BLOCKQUOTE, PREFORMATTED, SUB, SUP, STRIKE), Ordered List- OL (LI, Type- 1, I, A, a; START, VALUE), Unordered List - UL (Bullet Type- Disc, Circle, Square, DL, DT, DD), ADDRESS Tag;

Creating Links: Link to other HTML documents or data objects, Links to other places in the same HTML documents, Links to places in other HTML documents;

Anchor Tag <A HREF> and <A NAME>, Inserting Inline Images <IMG ALIGN, SRC, WIDTH, HEIGHT, ALT, Image Link, Horizontal Rules <HR ALIGN, WIDTH, SIZE, NOSHADE>;

Web Page Authoring Using HTML

Tables: Creating Tables, Border, TH, TR, TD, CELLSPACING, CELLPADDING, WIDTH, COLSPAN, CAPTION, ALIGN, CENTER;

Frames: Percentage dimensions, Relative dimensions, Frame – Src, Frameborder, height and width, Creating two or more rows Frames <FRAMESET ROWS >, Creating two or more Columns Frames <FRAMESET COLS >, <FRAME NAME SRC MARGINHEIGHT MARGINWIDTH SCROLLING AUTO NORESIZE>, <NOFRAMES>, </NOFRAMES>;

Forms: Definition, Use – Written to a file, Submitted to a database such as MSAccess or Oracle, E-mailed to someone in particular, Forms involve two-way communication;
Form Tags: FORM, <SELECT NAME, SIZE, MULTIPLE / SINGLE> <OPTION> ... </SELECT>, <TEXTAREA NAME ROWS COLS > , , </TEXTAREA>, METHOD, CHECKBOX, HIDDEN, IMAGE, RADIO, RESET, SUBMIT, INPUT <VALUE, SRC, CHECKED, SIZE, MAXLENGTH, ALIGN>;

Document Object Model

Concept and Importance of Document Object Model, Dynamic HTML documents and Document Object Model.
Cascading Style Sheets
Introduction to Cascading Style Sheet (CSS), three ways of introducing the style sheets to your document. Basic Syntax; Creating and saving cascading style sheets. <STYLE> tag.
Examples showing the linking of external style sheet files to a document; Inline and Embed, <DIV> tag; COLOR, BACKGROUND-COLOR, FONT-FAMILY, FONT-STYLE, FONT-SIZE and FONT-VARIANT; FONTWEIGHT, WORD-SPACING, LETTER-SPACING, TEXTDECORATION, VERTICAL-ALIGN, TEXT-TRANSFORM; TEXT-ALIGN, TEXT-INDENT, LINEHEIGHT,
Introduction to Margin, Padding and Border;
MARGINS (all values), MARGIN-PROPERTY, PADDIND (all values), PADDINGPROPERTY; BORDER (all values), BORDER-PROPERTY, BACKGROUNDIMAGE, BACKGROUNDREPEAT; Additional Features, Grouping Style Sheets, Assigning Classes; Introduction to Layers, <LAYER>, <ILAYER> tag;

eXtensible Markup Language (XML)

XML: Introduction;
Features of XML: XML can be used with existing protocols, Supports a wide variety of applications, Compatible with SGML, XML documents are reasonably clear to the layperson;
Structure of XML: Logical Structure, Physical Structure;
XML Markup: Element Markup i.e (<foo>Hello</foo>), Attribute Markup i.e. (<!element.name property="value">) ;
Naming Rules: used for elements and attributes, and for all the descriptors, Comments Entity Declarations :<! ENTITY name "replacement text">;
Element Declarations: <!ELEMENT name content>;
Empty Elements: <!ELEMENT empty.element EMPTY>;
Unrestricted Elements: <!ELEMENT any.element ANY>;
Element Content Models : Element Sequences i.e. <!ELEMENT counting (first, second, third, fourth)>, Element Choices <!ELEMENT choose(this.one | that.one)>, Combined Sequences and Choices;
Element Occurrence Indicators :-Discussion of Three Occurrence Indicators
? (Question Mark)
* (Asterisk Sign)
+ (Plus Sign)
Character Content: PCDATA (Parseable Character data) <!ELEMENT text(#PCDATA),
Document Type Declaration (DTD) and Validation;
Developing a DTD: Modify an existing SGML DTD, Developing a DTD from XML Code, either automatically or manually;

Viewing XML in Internet Explorer, Viewing XML using the XML Data Source Object.
XSL (Extensible Style Sheet Language) or CSS (Cascading Style Sheet);

Unit 3: Web Scripting

VBScript

Introduction, Adding VBScript code to HTML page, VBScript Data type-Variant subtypes, VBScript Variables: (Declaring variable, Naming restrictions, Assigning value to variables, Scalar variables and 1-D Array), VBScript Constants, VBScript Operators, and Operator precedence;
MsgBox: functions of message box (Prompt, Buttons, Title, Helpline, Context), Return values of MsgBox function, button argument setting.
Conditional statements: If..Then.. Else, Select case;
Loops: Do loops, While.. Wend, For.. Next, For..Each..Next;
VBScript variables: Sub procedures, Function procedures;
Using VBScript with HTML form controls, Data handling functions, String functions, Date and Times functions;

Unit 4: Multimedia And Authoring Tools

Graphics Devices: Monitor display configuration, Basics of Graphics Accelerator Card and its importance;
Basic concepts of Images: Digital Images and Digital Image Representation
Image Formats :TIFF, BMP, JPG/JPEG, GIF, PIC. PDF, PSD;
Theory of design, form, line, space, texture, color, typography, layout, color harmony, unity, balance, proportion, rhythm, repetition, variety, economy, still life, light and shade, Poster Design; Still life, colored layout, Poster Design, Designing of Books, magazines brochures, children's literature, narrative text handling, scripts in Indian Languages, picture books, comics, illustrations with photographs, scientific illustrations, conceptual illustrations, handling of assignment for the market;
Image Scanning with the help of scanner: Setting up Resolution, Size, File formats of images; image preview, Bitonal, Grey Scale and color options; Significance of PDF- creation, modification; Animation, Morphing and Applications
Graphic Tools: Image Editing Software (Photoshop / Coreldraw)
Basic Concepts: An Introduction, creating, Opening and saving files, Menus, Toolbox, Color control icons, Mode control icons, Window controls icons; creating new images, Image capture (TWAIN) from scanner other files;
Image Handling: Cropping an image, adjusting image size, increasing the size of the work canvas, saving an image;
Layers: Adding layers, dragging and pasting selections on to layers, dragging layers between files, viewing and hiding layers, Editing layers, rotating selections, scaling an object, preserving layers transparency, moving and copying layers, duplicating layers, deleting layers, merging layers, using adjustment layers;
Channels and Masks: Channel palette, showing and hiding channels, splitting channels in to separate image, merging channels, creating a quick mask, editing masks using quick mask mode;

Painting and Editing: Brushes palette, brush shape, creating and deleting brushes, creating custom brushes, setting brush options, saving, loading and appending brushes, Options palette;
Opacity, pressure, or exposure, paint fade-out rate, making selections, using selection tools, adjusting selections, softening the edges of a selection, hiding a selection border, moving and copying selections, extending and reducing selections, pasting and deleting selections, Image tracing (CorelDraw).

Concept of Multimedia: Picture/Graphics, Audio, Video;

Sound: Recording Sound using Sound Recorder (Capture), Sound capture through sound editing software (ex: Sound forge), Sound editing, Noise correction, Effect enhancement ;

Voice Recognition Software Philips/Dragon, MIDI Player, Sound Recorder, MONO & Stereo.
Sound File Format: AIFF (Audio Input File Format from Apple Mac) , MIDI, WAV, MP3, ASF (Streaming format from Microsoft).

Importing audio and saving audio from Audio CD.

Sound Quality: CD Quality, Radio Quality, Telephone Quality;

Multimedia and Web Technology (Code 067)

Class XI (Practical)

Duration: 3 Hours **Total Marks: 30**

1. Hands on Experience 15

A topic based homepage has to be to be developed by each student using various commands covered in HTML and VBScript

Web page should be designed with following features.

- HTML Basic Tags (html/head/title/body/B/I/U/BR/HR)
- Anchor/Image insertion/Linking
- Tables/Frame/Form
- CSS
- XML Markup / Declarations / Element Content Model
- Element Occurrence Indicators
- Buttons/Combo Box/Check Box/Text Box using VBScript

2. Practical File with following case studies 10

The practical file should be made on the following domain specific area (with supported documents and printout)

- Make a web page for Crime against Poor Community,
- Link few more pages to the developed page, containing information about Crime and Steps taken by Government. (Use HTML tags to make a Static web page)
- Use inline styling to change appearance of contents of the web page.
- Use Style sheets (embedding or linking) to change the appearance of all the pages developed in the above case.
- Enhance the above web page by providing data in sheet format.
- At this step of web page development add dynamic features such as adding time and current date to the web page
- Collect user information using forms, for registration. Display the collected user details using message box, saying thank you for registration. (Use VB Script)

Case Studies:

(These case studies can also be used to experiment the concepts learned during the course. Knowledge domain: HTML, DHTML, CSS, VB Script, and Image Editing Software's)

1. Website of a student containing personal information about student such as email address, photograph, likes, dislikes, hobbies, class, school name, achievements, favorite restra, favorite tourist places, ultimate aim of life, message to mankind, role model.

2. Website of a School providing information of a school containing Moto of school, photograph of school, brief description of school, name of the principal, facilities and infrastructure, labs, sports, faculty and departments information, results and achievements of students.
3. Website of a Restaurant providing information about types of food items, brief description about each item with pictures, price list, and availability timings.
4. Website of a Travel Agency to provide the information about various tourist places, various modes of journey available, types of hotels available.

Note:

- For developing the website collect real information from various sources.
- It is advised to break up the above-mentioned case studies into smaller modules as per coverage of the course.
- Teachers can provide alternative case studies also of similar kind.

3. Viva Voce 05

Five questions from topics covered in the curriculum

Multimedia and Web Technology (Code 067)

Class XII (Theory)

Duration: 3 hours **Total Marks: 70**

Unit No.	Unit Name	Marks
1.	COMPUTER SYSTEM	05
2.	WEB TECHNOLOGIES	10
3.	WEB DEVELOPMENT	40
4.	MULTIMEDIA AND AUTHORING	15

Unit 1: Computer System

Database Terminology: Data, Record/Tuple, Table, Database
Concept of Keys: Candidate Key, Primary Key, Alternate Key, and Foreign Key;
Database Tool: Using MS– Access, Creating and Saving Table, Defining Primary Key, Inserting and Deleting Column, Renaming Column, Inserting records, Deleting Records, Modifying Records, and Table Relationship.

Unit 2: Web Technologies

Communication and network concepts

Evolution of Networking: ARPANET, Internet, Interspace;
Different ways of sending data across the network with reference to switching techniques;
Data Communication terminologies: Concept of Channel, Baud, Bandwidth (Hz, KHz, MHz) and Data transfer rate (bps, kbps, Mbps, Gbps, Tbps);
Transmission media: Twisted pair cable, coaxial cable, optical fiber, infrared, radio link, microwave link and satellite link.
Network devices: Modem, RJ45 connector, Ethernet Card, Hub, Switch, Gateway;
Different Topologies- Bus, Star, Tree; Concepts of LAN, WAN, MAN;
Protocol: TCP/IP, File Transfer Protocol (FTP), PPP, Level-Remote Login (Telnet), Internet, Wireless/Mobile Communication, GSM, CDMA, WLL, 3G, SMS, Voice mail, Application Electronic Mail, Chat, Video Conferencing;
Network Security Concepts: Cyber Law, Firewall, Cookies, Hackers and Crackers;

Introduction to Open Source based software

Terminology: OSS, FLOSS, GNU, FSF, OSI, W3C
Definitions: Open Source Software, Freeware, Shareware, Proprietary software, Localisation, UNICODE
Softwares : Linux, Mozilla web browser, Apache server, MySQL, Postgres, Pango, OpenOffice, Tomcat, PHP, Python
Websites: www.sourceforge.net, www.openrdf.org, www.opensource.org, www.linux.com, www.linuxindia.net, www.gnu.org.

Multimedia Application*:* Education (use of CAI tool), Entertainment , Edutainment, Virtual Reality, Digital Libraries, Information Kiosks, Video on Demand, Web Pages Video phone, Video conferencing and Health care.

Unit 3: Web Development

Review Of HTML/DHTML, VBScript covered in Class XI.

Installation and Managing WEB-Server: Internet Information Server (IIS) / Personal Web Server (PWS).

Active Server Pages (ASP): Concept of ASP, features of ASP, other equivalent tools – JSP, PHP;

Constants: String and Numeric;

Data types: Integer, Floating Point (Single, Double), String, Date, Boolean, Currency, Variant, Object;

Variables: Explicit and Implicit Declaration;

Operators:

Arithmetic: +, - (Unary and Binary), *, /, \(integer division) mod, ^;

Comparison: <, >, <=, >=, <>, =;

Logical: AND, OR, NOT, XOR, EQV, IMP;

String Operator: & or + (for Concatenation);

Functions:

Conversion functions: Abs(), CBool(), CByte(), CInt(), CStr(), CSng(), CLng(), CDate();

String Manipulation Functions: UCase(), LCase(), Len(), Left(), Right(), Mid(), LTrim(), InStr(), RTrim(), LTrim();

Time & Date Functions: Date(), Day(), Hour(), Left(), Len(), Minute(), Month(), Monthname(), Now();

Arrays: Declaration and use of 1 dimensional arrays;

Controls: IF..THEN, IF..THEN..ELSE..END IF, IF..THEN.. ELSEIF..THEN.. END IF, SELECT..CASE..END SELECT, FOR..NEXT, FOR EACH.. NEXT, DO WHILE..LOOP, DO.. LOOP WHILE, DO UNTIL . LOOP;

Procedures and Functions, Passing parameters/arguments;

Concept of object model structure (client to server and server to client);

Objects: Properties, Methods, Events, Setting Object properties, Retrieving Object properties, calling objects/methods;

Types of Objects: Response, Request, Application, Session, Server, ASPError;

Response Object: Write Method, AddHeader, AppendToLog, BinaryWrite, Using Shortcuts <%=value/expr%>, Controlling information: Buffer, Flush Clear, End;

Request Object: Request Object Collection: QueryString, Form, ServerVariables, Cookies, ClientCertificate;

Application : Contents, Lock, Unlock, Remove, RemoveAll;

ASP Components: AD Rotator, Content Rotator, Counter, Page Counter, Permission Checker;

Text Files: Open and Read content from a text file;

Elementary Database Concepts: Concept of Table/Relation, Relationship, Candidate Key, Primary Key, Alternate Key, Foreign Key, Connecting with Databases: Creation of DSN, using OLE DB.

Working on Database: Inserting, Retrieving, Modifying/Updation of records from Tables in Databases using server objects (ADODB. Connection, ADODB. Recordset);

Server Variables: HTTP_User_Agent, REMOTE_ADDER, REMOTE_HOST, SERVER_NAME;

Unit 4: Multimedia and Authoring Tools

Movie File Formats: AVI, MPEG, SWF, MOV, DAT;
Movie Frames: Concept of Frame, Frame Buffer, and Frame Rate;
Authoring Tools; Making Animation, Embedding Audio/Video, and Embedding on the web page;

Multimedia Authoring Using Macromedia Flash
Making of Simple Flash Movie, Setting Properties, Frame Rate, Dimensions, and Background Color;
Scene: Concept of Scene, Duplicate Scene, Add Scene, Delete Scene, and Navigating between Scenes;
Layers: Concept of Layer, Layer Properties, Layer Name, Show/Hide/Lock layers, Type of Layer - Normal/Guide/Mask, Outline Color, Viewing Layer as outline, Layer Height, Adding/deleting a layer;
Frame: Concept of Frame;
Creating a Key Frame, Inserting Text Into the Frame, Inserting Graphical Elements into the frame, Converting Text/Graphics to Symbol, Inserting Symbol into the Frame, Setting Symbol Property (Graphics/Button/Movie), Inserting Blank Frame, Inserting Blank Key Frame, Inserting Key Frame into the Blank frame, Selecting all/Specific frames of a Layer, Copying/Pasting selected Frames,
Special Effects: Motion Tweening, Shape Tweening, Color effect, Inserting Sound Layer;
Testing a Scene and Movie;
Import/Export (Movie/Sound and other multimedia objects)
Publishing: Publishing A Flash Movie; Changing publish Settings; Producing SWF(Flash Movie), HTML page, GIF image, JPEG Image (*.jpg), PNG Image, Windows Projector (*.exe), Macintosh Projector (*.hqx), Quick Time (*.mov), Real Player (*.smil);
Testing with Publish Preview

Multimedia and Web Technology (Code 067)

Class XII (Practical)

Duration: 3 Hours **Total Marks: 30**

1. Hands on Experience (15)

A website based on a particular topic has to be to be developed by each student using various commands covered in HTML, VBScript and ASP with at least 4 web pages.
Web page should be designed with following features.

- HTML Basic Tags (html/head/title/body/B/I/U/BR/HR)
- Functions
- Conditional and Control Statements
- Objects: Response/Request / Application
- /Session /Server /ASP error
- Image Editing using Photo Shop /Corel draw
- Merging layers /Moving and Copying Layers
- Use of Multimedia Authoring (Using Macromedia Flash)

  (Note: Output as Web page/Flash Movie/Windows Projector/Quick Time)

2. Practical File (05)

The practical file should be made on the following domain specific area (with supported documents and printout)

- Make a Simple web page containing almost all the tags of HTML.
- Develop a Home page for Income Tax department (Simple and Textual) and store it in the directory used for Web Services on the Web-Server.
- View that web page on the Browser.
- Enhance the home page by providing links to other sample pages (e.g. Income Tax Zone, Income Tax Detail Form for an individual, Income Tax Notification, Income Tax News etc.)
- Embed Time and Date on the home page.
- Further enhance the website by providing User Registration Page. Collect the user details and Display a new web page showing Thanks For Registration. Also write appropriate functions to validate form inputs.
- Give a login facility to the user with Anonymous name and maintain the session till the User logs out.
- For user log in attempts, maintain a visitor count.
- Change the login module of the web page and now connect it to the IncomeTax User database on the server. This is to be done to store the registration detail and facilitate login to the user.
- The login page is to be made in a way that it should also provide facility to change password, if user forget password.
- Store some of the created or edited sound files on the Web-Server and provide links to play it.

- Change the appearance of the web page using pictures at appropriate places (e.g. Logo of Income Tax Department, Photograph of Income Tax Building etc.)
- Visit websites (State Govt./ Local language newspaper) and get 5 different printouts in local language.

(Note: Student can also improve the case studies from class XI and enhance it further with database and multimedia support)

3. Projects (05)

Case Studies are to be divided into following parts:

Case study Part 1(Collection, Editing and Creation of Website Resources):

Create an electronic movie with various pictures, audio clipping, movie clippings, and factual text related to school / organisation;

- Introduction to 3D Animation (Using 3D Studio)
- Embedding video and audio in web pages.
- An introduction to interactive walk-through.
- Embedding walk-through into web pages.

Case Study Part 2(Development of Web Content with resources):

Case studies covered in class XI with database support with Login, Online Registration, Booking and/or ordering facility.

Sample Case Study

(Note: Other similar type of case studies can also be used for the project work)

Mr. Verma is the CEO of *copsi* soft drinks (I) Ltd. His company is having a wide network of distributors for *copsi* branded soft drinks. With the increase in sales and distribution network, it is required to adopt a new technological intervention in the existing system. He wants that the company should have a global presence over the widely popular medium, called World Wide Web. Assume that you are appointed as the senior person of the development team. You are required to collect the company information and its current requirement. For your easiness we had collected the details of the company and are as follows:

The company Information:

Name of the Company: *copsi* soft drinks (I) Ltd.

Zone: East, West, North and South

Distributors: All over the world.

Mr. Verma said that the web site should be able to reflect company in terms of :

- Home Page
- Product & Promotion Page
- Distributor Login Page / Password Recovery Page

- Distributor Specific Details Page
- Registration Page for Distributor-ship
- Company News and Flashes
- Company Profile

Technical Details:

Web site Introduction is to be made in flash.

A proper database is to be maintained for the distributor information.

Note:

- For developing the above sites/movies collect the actual information from various sources.
- It is advised to break up the above-mentioned case studies into smaller modules as per coverage of the course.
- Teachers can provide alternative case studies also of similar kind.

4. Viva Voce (05)

Five questions from topics covered in the curriculum

Reference Books

- HTML Complete – Sybex (BPB)
- Mastering HTML 4 Premium Edition – Ray (BPB)
- HTML Example Book – Farrar (BPB)
- Mastering WEB DESIGNING – Maccoy (BPB)
- Inside Adobe Photoshop 6 – Bouton (BPB)
- Multimedia on the PC – Sinclair (BPB)
- Multimedia Magic – Gokul, S (BPB)
- Mastering CorelDraw 9 – Altman (BPB)
- Learn Advanced HTML with DHTML – Ramalho (BPB)
- Effective Web Design – Navarro (BPB)
- ASP, ADO and XML Complete – Sybex (BPB)
- Mastering Active Server Pages 3 – Russell (BPB)
- Practical ASP – Bayross (BPB)
- Inside Flash 5 – Kea thing (BPB)
- VBSCRIPT Interactive Course: Waite Group – Simon (BPB)
- Computer Network – A.S. Tanenbaum, (4th Edition) (PHI)
- Network Concept and Architechtures – Hancock (BPB)

Educational Qualification for the post of PGT to teach Computer Science (083), Informatics Practices (065) and Multi Media and Web Technology (067)

1. **B.E.** or **B. Tech** (Computer Science/IT) from a recognized University or an equivalent Degree or Diploma from an institution/university recognized by the Govt. on India.
2. **B.E.** or **B. Tech** (any Stream) and Post Graduate Diploma in Computers from any recognized university.
3. **M.Sc. (Computer Science) MCA** or **Equivalent** from a recognized University.
4. **B.Sc. (Computer Science) BCA** or **Equivalent** and **Post Graduate** degree in any subject from a recognized University.
5. **Post Graduate Diploma** in Computer and Post Graduate degree in any subject from a recognized University.
6. **'A'** Level from **DOEACC** and **Post Graduate** degree in any subject.
7. **'B' or 'C' Level** from **'DOEACC', Ministry of Information and Communication Technology.**

17. Economics (Code No. 30)

Rationale

Economics is one of the social sciences, which has great influence on every human being. As economic life and the economy go through changes, the need to ground education in children's own experience becomes essential. While doing so, it is imperative to provide them opportunities to acquire analytical skills to observe and understand the economic realities.

At senior secondary stage, the learners are in a position to understand abstract ideas, exercise the power of thinking and to develop their own perception. It is at this stage, the learners are exposed to the rigour of the discipline of economics in a systematic way.

The economics courses are introduced in such a way that in the initial stage, the learners are introduced to the economic realities that the nation is facing today along with some basic statistical tools to understand these broader economic realities. In the later stage, the learners are introduced to economics as a theory of abstraction.

The economics courses also contain many projects and activities. These will provide opportunities for the learners to explore various economic issues both from their day-to-day life and also from issues, which are broader and invisible in nature. The academic skills that they learn in these courses would help to develop the projects and activities. The syllabus is also expected to provide opportunities to use information and communication technologies to facilitate their learning process.

OBJECTIVES

1. Understanding of some basic economic concepts and development of economic reasoning which the learners can apply in their day-to-day life as citizens, workers and consumers.
2. Realisation of learners' role in nation building and sensitivity to the economic issues that the nation is facing today.
3. Equipment with basic tools of economics and statistics to analyse economic issues. This is pertinent for even those who may not pursue this course beyond senior secondary stage.
4. Development of understanding that there can be more than one views on any economic issue and necessary skills to argue logically with reasoning.

Class XI

Paper 1	3 Hours		100 Marks
Units	**Periods**		**Marks**
Part A : Statistics for Economics			
1.	Introduction	5	3
2.	Collection, Organisation and Presentation of Data	25	12
3.	Statistical Tools and Interpretation	64	30
4.	Developing Projects in Economics	10	5
		104	50
Part B: Indian Economic Development			
5.	Development Policies and Experience (1947-90)	18	10
6.	Economic Reforms since 1991	14	8
7.	Current Challenges facing Indian Economy	60	25
8.	Development experience of India-A comparison with neighbours	12	7
		104	50

Part A : Statistics for Economics

In this course, the learners are expected to acquire skills in collection, organisation and presentation of quantitative and qualitative information pertaining to various simple economic aspects systematically. It also intends to provide some basic statistical tools to analyse, interpret any economic information and draw appropriate inferences. In this process, the learners are also expected to understand the behaviour of various economic data.

Unit 1: Introduction — 5 Periods

What is Economics?
Meaning, scope and importance of statistics in Economics

Unit 2: Collection, Organisation and Presentation of data — 25 Periods

Collection of data - sources of data - primary and secondary; how basic data is collected; methods of collecting data; Some important sources of secondary data: Census of India and National Sample Survey Organisation.

Organisation of Data: Meaning and types of variables; Frequency Distribution.

Presentation of Data: Tabular Presentation and Diagrammatic Presentation of Data: (i) Geometric forms (bar diagrams and pie diagrams), (ii) Frequency diagrams (histogram, polygon and ogive) and (iii) Arithmetic line graphs (time series graph).

Unit 3: Statistical Tools and Interpretation 64 Periods

(For all the numerical problems and solutions, the appropriate economic interpretation may be attempted. This means, the students need to solve the problems and provide interpretation for the results derived)

Measures of Central Tendency- mean (simple and weighted), median and mode

Measures of Dispersion - absolute dispersion (range, quartile deviation, mean deviation and standard deviation); relative dispersion (co-efficient of quartile-deviation, co-efficient of mean deviation, co-efficient of variation); Lorenz Curve: Meaning and its application.

Correlation - meaning, scatter diagram; Measures of correlation - Karl Pearson's method (two variables ungrouped data) Spearman's rank correlation.

Introduction to Index Numbers - meaning, types - wholesale price index, consumer price index and index of industrial production, uses of index numbers; Inflation and index numbers.

Unit 4: Developing Projects in Economics 10 Periods

The students may be encouraged to develop projects, which have primary data, secondary data or both. Case studies of a few organisations / outlets may also be encouraged. Some of the examples of the projects are as follows (they are not mandatory but suggestive):

(i) A report on demographic structure of your neighborhood;

(ii) Consumer awareness amongst households

(iii) Changing prices of a few vegetables in your market

(iv) Study of a cooperative institution: milk cooperatives

The idea behind introducing this unit is to enable the students to develop the ways and means by which a project can be developed using the skills learned in the course. This includes all the steps involved in designing a project starting from choosing a title, exploring the information relating to the title, collection of primary and secondary data, analysing the data, presentation of the project and using various statistical tools and their interpretation and conclusion.

Part B: Indian Economic Development

Unit 5: Development Policies and Experience (1947-90): 18 Periods

A brief introduction of the state of Indian economy on the eve of independence.

Common goals of Five Year Plans.

Main features, problems and policies of agriculture (institutional aspects and new agricultural strategy, etc.), industry (industrial licensing, etc,) and foreign trade.

Unit 6: Economic Reforms since 1991: 14 Periods

Need and main features - liberalisation, globalisation and privatisation;

An appraisal of LPG policies

Unit 7: Current challenges facing Indian Economy: 60 Periods

Poverty- absolute and relative; Main programmes for poverty alleviation: A critical assessment;

Rural development: Key issues - credit and marketing - role of cooperatives; agricultural diversification; alternative farming - organic farming

Human Capital Formation: How people become resource; Role of human capital in economic development; Growth of Education Sector in India

Employment: Growth, informalisation and other issues: Problems and policies

Infrastructure: Meaning-and Types: Case Studies: Energy and Health: Problems and Policies- A critical assessment;

Sustainable Economic Development:

Meaning; Effects of Economic Development on Resources and Environment.

Unit 8: Development Experience of India: 12 Periods

A comparison with neighbours

India and Pakistan
India and China

Issues: growth, population, sectoral development and other developmental indicators.

Class XII

Paper 1 **3 Hours** **100 Marks**

Units		Periods	Marks
Part A : Introductory Microeconomics			
1	Introduction	10	4
2.	Consumer Behaviour and Demand	25	13
3.	Producer Behaviour and Supply	37	23
4.	Forms of Market and Price Determination	20	10
5.	Simple applications of Tools of demand and supply	12	-
		104	50
Part B : Introductory Macroeconomics			
6.	National Income and Related Aggregates	30	15
7.	Determination of Income and Employment	25	12
8.	Money and Banking	18	8
9.	Government Budget and the Economy	17	8
10.	Balance of Payments	14	7
		104	50

Part A : Introductory Microeconomics

Unit 1: Introduction 10 Periods

What is microeconomics?

Central problems of an economy, production possibility curve and opportunity cost

Unit 2: Consumer Behaviour and Demand 25 Periods

Consumer's Equilibrium - meaning and attainment of equilibrium through Utility Approach: One and two commodity cases

Demand, market demand, determinants of demand, demand schedule, demand curve, movement along and shifts in demand curve, price elasticity of demand, measurement of price elasticity of demand - percentage, total expenditure and geometric method.

Unit 3: Producer Behaviour and Supply 37 Periods

Production function: Returns of a factor and Returns to scale

Supply, market supply, determinants of supply, supply schedule, supply curve movement along and shifts in supply curve, price elasticity of supply, measurement of price elasticity of supply - percentage and geometric method.

Cost and Revenue : Short run costs-Total cost, Total variable cost, Total Fixed cost; Average Fixed cost, Average Variable cost and Marginal cost-meaning and their relationship. Revenue-total, average and marginal revenue- Producer's equilibrium- Meaning and its conditions in terms of total cost and total revenue.

Unit 4: Forms of Market and Price Determination 20 Periods

Forms of market - Perfect competition, Monopoly, Monopolistic competition - their meaning and features.

Price determination under perfect competition - Equilibrium price, effects of shifts in demand and supply.

Unit 5: Simple applications of Tools of demand and supply 12 Periods

Part B: Introductory Macroeconomics

Unit 6: National Income and related aggregates 30 Periods

Macroeconomics: Meaning.

Circular flow of income, concepts of GDP, GNP, NDP, NNP (at market price and factor cost), National Disposable Income (gross and net); Private Income, Personal Income and Personal

Disposable Income, Measurement of National Income - Value Added method, Income method and Expenditure method.

Unit 7: Determination of Income and Employment 25 Periods

Aggregate demand, Aggregate supply and their components.
Propensity to consume and propensity to save (average and marginal).
Meaning of involuntary unemployment and full employment.
Determination of income and employment: Two sector model
Concept of investment multiplier and its working
Problems of excess and deficient demand. :
Measures to correct excess and deficient demand - availability of credit, change in Government spending.

Unit 8: Money and Banking 18 Periods

Money - meaning, evolution and functions.
Central bank - meaning and functions.
Commercial banks - meaning and functions.

Unit 9: Government Budget and the Economy 17 Periods

Government budget - meaning and its components
Objectives of government budget
Classification of receipts - revenue and capital; classification of expenditure - revenue and capital, plan and non-plan, and developmental and non-developmental. Balanced budget, surplus budget and deficit budget: meaning and implications. Revenue deficit, fiscal deficit and primary deficit: meaning and implications; measures to contain different deficits.

Unit 10: Balance of Payments 14 Periods

Foreign exchange rate- meaning (Fixed and Flexible), merits and demerits; Determination through demand and supply
Balance of payments account
- meaning and components

18. Business Studies (Code No. 054)

Rationale

The courses in Business Studies and Accountancy are introduced at + 2 stage of Higher Secondary Education as formal commerce education is provided after first ten years of schooling. Therefore, it becomes necessary that instructions in these subjects are given in such a manner that students have a good understanding of the principles and practices bearing in business (trade and industry) as well as their relationship with the society.

Business is a dynamic process that brings together technology, natural resources and human initiative in a constantly changing global environment. To understand the framework in which a business operates, a detailed study of the organisation and management of business processes and its interaction with the environment is required. Globalisation has changed the way firms transact their business. Information Technology is becoming a part of business operations in more and more organisations. Computerised systems are fast replacing other systems. E-business and other related concepts are picking up fast which need to be emphasized in the curriculum.

The course in Business Studies will prepare students to analyse, manage, evaluate and respond to changes which affect business. It provides a way of looking at and interacting with the business environment. It recognizes the fact that business influences and is influenced by social, political, legal and economic forces. It allows students to appreciate that business is an integral component of society and develops an understanding of many social and ethical issues.

Therefore, to acquire basic knowledge of the business world, a course in Business Studies would be useful. It also informs students of a range of study and work options and bridges the gap between school and work.

Objectives

- To develop in students an understanding of the processes of business and its environment;
- To acquaint students with the dynamic nature and inter-dependent aspects of business;
- To develop an interest in the theory and practice of business, trade and industry;
- To familiarize candidates with theoretical foundations of organizing, managing and handling operations of a business firm;
- To help students appreciate the economic and social significance of business activity and the social cost and benefits arising therefrom;
- To acquaint students with the practice of managing the operations and resources of business;
- To prepare students to function more effectively and responsibly as consumers, employers, employees and citizens;

- To help students in making the transition from school to the world of work including self-employment;
- To develop in students a business attitude and skills to be precise and articulate.

Business Studies Syllabus

CLASS XI

One Paper **3 Hours** **100 Marks**

Units		Periods	Marks
Part A:	**Foundations of Business**		
1.	Nature and Purpose of Business	20	08
2.	Forms of Business Organisations	24	12
3.	Private, Public and Global Enterprises	20	10
4.	Business Services	18	08
5.	Emerging Modes of Business	10	06
6.	Social Responsibility of Business and Business Ethics	12	06
		104	50
Part B :	**Corporate Organisation, Finance and Trade**		
7.	Formation of a Company	16	07
8.	Sources of business finance	20	10
9.	Small Business	14	07
10.	Internal Trade	20	10
11.	International Business	12	06
12.	Project Work	22	10
		104	50

A Part: Foundations of Business (Periods 104)

Unit 1: Nature and Purpose of Business (Periods 20)

- Concept and characteristics of business
- Business, profession and employment - distinctive features
- Objectives of business - economic and social, role of profit in business
- Classification of business activities: Industry and Commerce

- Industry - types: primary, secondary, tertiary
- Commerce: Trade and Auxiliaries
- Business risks - nature and causes,

Unit 2: Forms of Business Organisations (Periods 24)

- Sole Proprietorship; Joint Hindu Family Business-meaning, features, merits and limitations;
- Partnership- meaning, types, registration, merits, limitations, types of partners;
- Cooperative Societies-types, merits and limitations
- Company: Private Ltd., Public Ltd. - merits, limitations;
- Choice of form of business organizations
- Starting a business - Basic factors.

Unit 3: Private, Public & Global Enterprises (Periods 20)

- Private Sector and Public Sector
- Forms of organising public sector enterprises
- Departmental Undertaking
- Statutory Corporation .
- Government Company
- Changing role of public sector
- Global Enterprises (Multinational Companies): meaning and features,joint ventures-meaning, benefits

Unit 4: Business Services (Periods 18)

- Nature and types of Business services - Banking, Insurance, Transportation, Ware housing, Communication.
- Banking - types of Banks, Functions of Commercial banks, E- banking
- Insurance - principles, types: life, fire and marine
- Postal and Telecom services
- Warehousing: types and functions

Unit 5: Emerging Modes of Business (Periods 10)

- E-Business - Meaning, scope and benefits, Resources required for successful e-business implementation, On-line transactions, payment mechanism, security and safety of business transactions;
- Outsourcing- concept, need and scope

Unit 6: Social Responsibility of Business and Business Ethics (Periods 12)

- Concept of social responsibility.
- Case for social responsibility;
- Responsibility towards owners, investors, employees, consumers, government, community and public in general.
- Business and environmental protection;
- Business ethics: concept and elements.

Part B: Corporate Organisation, Finance and Trade (Periods 104)

Unit 7: Formation of a Company (Periods 16)

Stages in the formation of a company;

- Promotion,
- Incorporation, and
- Commencement of business

Unit 8: Sources of Business Finance (Periods 20)

- Nature and significance
- Owner's funds and borrowed funds
- Sources of raising Finance:
  - Equity and Preference shares
  - Global Depository Receipt, American Depository Receipt
  - Debentures and Bonds
  - Retained Profits
  - Public deposits
  - Loan from Financial Institutions
  - Loans from commercial Banks
  - Trade Credit

Unit 9: Small Business: (Periods 14)

- Small Scale Industry; Tiny Sector; cottage and rural industry; ,
- Role of small business in rural India;
- Problems of small business in India.
- Government Assistance and Special Schemes for Industries in rural, backward and hilly areas.

Unit 10: Internal Trade (Periods 20)

- Meaning and types of internal trade: wholesale and retail;
- Services of a wholesaler and a retailer
- Types of Retail Trade:
  - Itinerant retailers and fixed shops.
  - Departmental store, super market, malls, chain store, mail order business, consumer's cooperative store.
  - Automatic Vending Machine
- Role of Chamber of Commerce and Industry in promotion of internal trade.

Unit 11: International Business (Periods 12)

- Nature, Importance and complexities involved in International Business;
- Ways of entering into international Business. Export-Import Procedures and documentation. Foreign Trade Promotion. Organizational support and incentives; Nature and importance of Export Processing Zone/special Economic Zone; International Trade Institutions and Agreement: WTO, UNCTAD, World Bank, IMF.

Unit 12: Project Work

Suggestive/Illustrative Projects **(Periods 22)**

Any one of the following:-

(i) Find out from local sample business unit (s) the various objectives they pursue.

(ii) Problems of setting up and running business units.

(iii) Enquiry into the ethics of running business through questionnaires.

(iv) Survey of quality of bank services in the local branch office.

(v) Study of postal and courier mail services.

(vi) Availability and use of agency services, advertising, packaging, investments in savings schemes, etc.

(vii) Survey of the popularity of credit cards issued by different banks.

(viii) Study the profile of a sole trader/partnership commenting on the nature and working of business.

(ix) Study of a Joint Hindu family business.

(x) Study of the working of any cooperative society.

(xi) Study of a small business unit regarding source of finance.

(xii) Nature of different traders (like hawkers and pedlars in a specific locality) in issue of goods, capital investment, turnover.

(xiii) Study of weekly bazaar in a locality.

(xiv) Study of franchise retail store.

(xv) Study of export/import of any article.

(xvi) Problems of women entrepreneurs in business.

(xvii) Waste/garbage disposal

(xviii) Study of pavement trade.

(xix) Prepare a scrapbook and collect articles on the changing role of public sector and any other topics related to the syllabus.

Marks may be suitably distributed over the different parts of the Project Report- 1. Objectives 2. Methodology 3. Conclusions - findings and suggestions

CLASS XII

One Paper **3 Hours** **100 Marks**

Unitwise Weightage

Units		Periods	Marks
Part A : Principles and Functions of Management			
1.	Nature and Significance of Management	14	7
2.	Principles of Management	14	7
3.	Business Environment	10	-
4.	Planning	14	7
5.	Organizing	16	10
6.	Staffing	16	10
7.	Directing	22	12
8.	Controlling	14	7
		120	60
Part B: Business Finance and Marketing			
9.	Financial Management	22	12
10.	Financial Markets	20	8
11.	Marketing	30	14
12.	Consumer Protection	16	6
		88	**40**

Part A: Principles and Functions of Management

Unit I: Nature and significance of Management (Periods 14)

- Management - concept, objectives, importance
- Nature of management; Management as Science, Art, Profession.
- Levels of management - top, middle, supervisory (first level)

- Management functions - planning. organizing. staffing. directing and controlling
- Coordination - nature and importance

Unit 2: Principles of Management (Periods 14)

- Principles of Management - meaning, nature and significance
- Fayol's principles of management
- Taylor's Scientific Management - Principles and Techniques

Unit 3: Business Environment (Periods 10)

- Business Environment - meaning and importance
- Dimensions of Business Environment - Economic, Social, Technological, Political and Legal
- Economic Environment in India; Impact of Government policy changes on business and industry, with special reference to adoption of the policies of liberalization, privatization and globalisation

Unit 4: Planning (Periods 14)

- Meaning, features, importance, limitations
- Planning process
- Types of Plans - Objectives, Strategy, Policy, Procedure, Method, Rule, Budget, Programme.

Unit 5: Organising (Periods 16)

- Meaning and importance.
- Steps in the process of organising.
- Structure of organization - functional and divisional.
- Formal and informal organization.
- Delegation: meaning, elements and importance.
- Decentralization: meaning and importance.
- Difference bctween delegation and decentralization.

Unit 6: Staffing (Periods 16)

- Meaning, need and importance of staffing
- Staffing as a part of Human Resource Management

- Steps in staffing process
- Recruitment - meaning and sources
- Selection - meaning and process
- Training and Development - meaning and need. Methods of training : job rotation, apprenticeship, vestibule and internship.

Unit 7: Directing (Periods 22)

- Meaning, importance and principles
- Elements of Directing
  - Supervision - meaning and importance
  - Motivation - meaning and importance, Maslow's hierarchy of needs; Financial and non-financial incentives.
  - Leadership - meaning, importance; qualities of a good leader
  - Communication - meaning and importance, formal and informal communication; barriers to effective communication.

Unit 8: Controlling (Periods 14)

- Meaning and importance
- Relationship between planning and controlling
- Steps in the process of control
- Techniques of controlling : budgetary control,

Part B : Business Finance and Marketing

Unit 9: Financial Management (Periods 22)

- Meaning, role, objectives of financial management
- Financial planning - meaning and importance;
- Capital Structure - meaning and factors
- Fixed and Working Capital -Meaning and factors affecting its requirements.

Unit 10: Financial Markets (Periods 20)

- Concept of Financial Market: Money Market- nature, instruments.
- Capital market: nature and types - primary and secondary market.
- Distinction between capital market and money market.
- Stock Exchange - meaning, functions, NSEl, OCTEI, Trading Procedure.
- Securities and Exchange Board of India (SEBI)- Objectives, Functions.

Unit 11: Marketing (Periods 30)

- Marketing - meaning, functions and role
- Distinction between marketing and selling
- Marketing mix - concept and elements
  - Product - nature, classification, branding, labeling and packaging
  - Physical distribution: meaning, role; Channels of distribution -meaning, types, factors determining choice of channels.
  - Promotion - meaning and role, promotion mix, Role of Advertising and personal selling; Sales Promotion, objections to Advertising
  - Price: factors influencing pricing

Unit 12: Consumer Protection (Periods 16)

- Importance of consumer protection
- Consumer rights
- Consumer responsibilities
- Ways and means of consumer protection - Consumer awareness and legal redressal with special reference to Consumer Protection Act.
- Role of consumer organizations and NGOs.

19. Accountancy (Code No. 055)

Rationale

The course in Accountancy' is introduced at + 2 stage of Senior Secondary education, as formal commerce education is provided after first ten years of schooling. With the fast changing economic scenario and business environment in a state of continuous flux, elementary business education along with accountancy as the language of business and as a source of financial information has carved out a place for itself at the Senior Secondary stage. Its syllabus content should give students a firm foundation in basic accounting principles and methodology and also acquaint them with the changes taking place in the presentation and analysis of accounting information, keeping in view the development of accounting standards and use of computers.

Against this background, the course puts emphasis on developing basic understanding about the nature and purpose of the accounting information and its use in the conduct of business operations. This would help to develop among students logical reasoning, careful analysis and considered judgement.

Accounting as an information system aids in providing financial information. The emphasis at Class XI is placed on basic concepts and process of accounting leading to the preparation of accounts for a sole proprietorship firm. Computerised accounting is becoming more and more popular with increasing awareness about use of computers in business. Keeping this in view, the students are exposed compulsorily to the basic knowledge about computers and its use in accounting in the same year.

In class XII, Accounting for Not for Profit Organisations and Partnership Firms are to be taught as a compulsory part. Students will also be given an opportunity to understand further about Computerized Accounting System, as an optional course to Analysis of Financial Statements.

Objectives :

- To familiarise the students with accounting as an information system;
- To acquaint the students with basic concepts of accounting and accounting standards;
- To develop the skills of using accounting equation in processing business transactions;
- To develop an understanding about recording of business transactions and preparation of financial statements;
- To enable the students with accounting for reconstitution of partnership firms;
- To enable the students to understand and analyse the financial statements; and
- To familiarize students with the fundamentals of computerized system of accounting.

CLASS XI

One Paper **3 Hours** **100 Marks**

Units		Periods	Marks
Part A : Financial Accounting-I			
1.	Introduction to Accounting	14	7
2.	Theory Base of Accounting	14	7
3.	Recording of Business Transactions	26	16
4.	Trial Balance and Rectification of Errors	22	8
5.	Depreciation, Provision and Reserves	22	12
6.	Accounting for Bills of Exchange Transactions	22	10
		120	60
Part B: Financial Accounting-II			
7.	Financial statements	44	25
8.	Accounts from incomplete records	8	5
9.	Computers in Accounting	18	6
10.	Accounting and Database System	18	4
		88	40

CLASS XI

Part A: Financial Accounting - I **(Periods 120)**

Unit 1: Introduction to Accounting (Periods 14)

- Accounting- meaning, objectives, Accounting as source of information, internal and external users of Accounting information and their needs.
- Qualitative characteristics of Accounting information-reliability, relevance, understandability and comparability.
- Basic Accounting Terms - Asset, Liability, Capital, Expense, Income, Expenditure, Revenue, Debtors, Creditors, Goods, Cost, Gain, Stock, Purchase, Sales, Loss, Profit, Voucher, Discount, Transaction, Drawings.

Unit 2: Theory Base of Accounting (Periods 14)

- Accounting Principles - meaning and nature
- Accounting Concepts: Entity, Money Measurement, Going Concern, Accounting Period, Cost Concept, Dual Aspect, Revenue Recognition (Realisation), Matching, Accrual, Full Disclosure, Consistency, Conservatism, Materiality
- Accounting Standards- Concept
- Process of accounting-from recording of business transactions to preparation of trial balance.
- Bases of Accounting - Cash Basis, Accrual Basis

Unit 3: Recording of Business Transactions (Periods 26)

- Voucher and Transactions: Origin of Transactions-Source Documents and Vouchers, preparation of Accounting vouchers; Accounting Equation Approach - Meaning and Analysis of transactions using Accounting Equation: Rules of Debit and Credit.
- Recording of Transactions: Books of original entry - Journal, Special Purpose Books: i) Cash Book - Simple, Cashbook with Bank column and Petty Cashbook, ii) Purchases Book, Sales Book, Purchase Returns Book, Sales Returns Book; Ledger-meaning, utility, format; posting from Journal and Subsidiary books; Balancing of Accounts.
- Bank Reconciliation Statement: Meaning, Need and Preparation, Corrected Cash Book Balance

Unit 4: Trial Balance and Rectification of Errors (Periods 22)

- Trial Balance: meaning, objectives and preparation.
- Errors: Types of Errors; errors affecting Trial Balance; errors not affecting Trial Balance.
- Detection and Rectification of Errors (One Sided and Two Sided); use of Suspense Account.

Unit 5: Depreciation, Provisions and Reserves (Periods 22)

- Depreciation: Meaning and need for charging depreciation, factors affecting depreciation, methods of depreciation-Straight Line method, Written Down Value method (excluding change in method), Method of recording depreciation-charging to asset account, creating provision for depreciation/accumulated depreciation account; Treatment of disposal of asset.
- Provisions and Reserves: meaning, importance, difference between Provisions and Reserves, types of Reserves: Revenue Reserve, Capital Reserve, General Reserve, Specific Reserve and Secret Reserves;

Unit 6: Accounting for Bills of Exchange Transactions (Periods 22)

- Bills of exchange and Promissory Note: definition, features, parties, specimen and distinction.
- Important Terms: Term of Bill, Accommodation Bill, Days of Grace, Date of Maturity, Bill at Sight, Negotiation, Endorsement, Discounting of Bill, Dishonour, Retirement and Renewal of a Bill.
- Accounting treatment of trade bills.

Part B: Financial Accounting - II **(Periods 104)**

Unit 7: Financial Statements (Periods 44)

- Financial statements: meaning and users.
- Distinction between Capital Expenditure and Revenue Expenditure
- Trading and Profit and Loss Account: Gross Profit, Operating Profit; Net Profit
- Balance Sheet: need, grouping and marshalling of Assets and Liabilities, Vertical Presentation of Financial Statement.
- Adjustments in preparation of financial statements with respect to closing stock, outstanding expenses, prepaid expenses, accrued Income, Income received In advance, depreciation and bad debts, provision for doubtful debts, provision for discount on debtors, manager's commission.
- Preparation of Trading and Profit & Loss Account and Balance Sheet of sole proprietorship.

Unit 8: Accounts from incomplete records (Periods 6)

Incomplete records : meaning, uses and limitations. Ascertainment of profit/loss by statement of affairs method.

Unit 9: Computers in Accounting (Periods 18)

- Introduction to Computer and Accounting Information System (AIS)
- Applications of computers in accounting:
  - Automation of accounting process, designing accounting reports, MIS reporting, data exchange with other information systems
- Comparison of accounting processes in manual and computerized accounting, highlighting advantages and limitations of automation
- Sourcing of accounting system: readymade and customized and tailor-made accounting system. Advantages and disadvantages of each option.

Unit 10: Accounting and Database System (Periods 18)

- Accounting and Database Management System
- Concept of entity and relationship: entities and relationships in an Accounting System: designing and creating simple tables, forms, queries and reports in the context of Accounting System.

CLASS XII

One Paper **3 Hours** **80 Marks**

Unit			Periods	Marks
Part A :	**Accounting for not for Profit Organisations, Partnership Firms and Companies**			
1.	Accounting for not for profit organizations.		22	10
2.	Accounting for Partnership Firms		14	5
3.	Reconstitution of Partnership		34	20
4.	Accounting for Share Capital and Debenture		54	25
			124	60
Part B: Financial Statement Analysis				
5.	Analysis of Financial Statements		33	12
6.	Cash Flow Statement		33	8
7.	Project Work		18	20
	Unit 1 : Project File	4 marks		
	Unit 2 : Written Test	12 marks (one hour)		
	Unit 3 : Viva Voce'	4 marks		
	OR		84	40
Part C: Computerized Accounting				
5.	Overview of Computerized System		12	5
6.	Accounting using Database Management System (DBMS)		26	8
7.	Accounting Applications of Electronic Spread sheet		24	7
8.	Practical Work in Computerized Accounting		22	20
	Unit 1 : File	4 marks		
	Unit 2 : Practical Examination	12 marks (one hours)		
	Unit 3 : Viva Voce'	4 marks		
			84	40

CLASS XII

Part A:

Accounting for Not-For-Profit Organisations, Partnership Firms and Companies. **(Periods 124)**

Unit 1: Accounting for Not-For-profit Organisations (Periods 22)

- Not for profit organisation: Meaning and examples.
- Receipts and payments: Meaning and concept of fund based accounting.

- Preparation of Income and Expenditure Account and Balance Sheet from Receipt and Payment Account with additional information.

Unit 2: Accounting for Partnership firms (Periods 14)

- Nature of Partnership firm: Partnership Deed-meaning, importance.
- Partners' Capital Accounts : Fixed vs Fluctuating Capital, Division of Profit among partners, Profit and Loss Appropriation Account including past adjustments.

Unit 3: Reconstitution of Partnership (Periods 34)

Changes in Profit Sharing Ratio among the existing partners-Sacrificing Ratio and Gaining Ratio.

- Accounting for Revaluation of Assets and Liabilities and distribution of reserves and Accumulated Profits.
- Goodwill: Nature, Factors affecting and methods of valuation: Average profit, Super profit and Capitalisation methods.
- *Admission of a Partner:* Effect of Admission of Partner, Change in Profit Sharing Ratio, Accounting Treatment for Goodwill (as per AS 10), Revaluation of Assets and Liabilities, Reserves (accumulated Profits) and Adjustment of Capitals.
- *Retirement/Death of a Partner:* Change in Profit Sharing ratio, accounting treatment of Goodwill, Revaluation of Assets and Liabilities, Adjustment of accumulated Profits (Reserves) and capitals.

Unit 4: Accounting for Share Capital and Debenture (Periods 54)

- Share Capital: Meaning, Nature and Types.
- Accounting for share capital: Issue and Allotment of Equity and Preference Shares; Private placement of shares, meaning of employee stock option plan, public subscription of shares : over subscription and under subscription; issue at par, premium and at discount; calls in advance, calls in arrears, issue of shares for consideration other than cash.
- Forfeiture of shares : accounting treatment, re-issue of forfeited shares.
- Presentation of Share Capital and Debenture in company's Balance Sheet.
- Issue of debenture-at par and premium; issue of debenture for consideration other than cash.
- Redemption of debentures out of capital; redemption methods : lump sum payment, draw by lots, purchase in the open market and conversion (excluding cum-interest and ex-interest).

Part B: Financial Statement Analysis

Unit 5: Analysis of Financial Statements (Periods 33)

- Financial Statements of a Company: preparation of simple balance sheet of a company in the prescribed form with major headings only.
- Financial Statement Analysis: meaning, significance, limitations,
- Tools for Financial Statement Analysis: Comparative Statements, Common Size Statements,

  Accounting Ratios: meaning and objectives, types of ratios:

  Liquidity Ratios: Current Ratio, Liquid Ratio

  Solvency Ratios: Debt to Equity, Total Assets to Debt, Proprietary Ratio

  Activity Ratios: Inventory Turnover, Debtors Turnover, Payables Turnover, Working Capital Turnover, Fixed Assets Turnover,

  Profitability Ratio: Gross Profit, Operating Ratio, Net Profit Ratio, Return on Investment, Earning Per Share, Dividend per Share, Price Earning Ratio

Unit 6: Cash Flow Statement (Periods 33)

- Cash Flow Statement: Meaning and objectives, preparation, adjustments related to depreciation, dividend and tax, sale and purchase of non-current assets (as per revised standard issued by ICAI)

Unit 7: Project Work in Accounting (Periods 18)

(Please refer to the guidelines published by the CBSE)

OR

Part C: Computerised Accounting (Periods 84)

Unit 5: Overview of Computerized Accounting System (Periods 12)

- Concept and types of Computerised Accounting System (CAS)
- Features of a Computerized Accounting System
- Structure of a Computerised Accounting System

Unit 6: Accounting using Database Management System (DBMS) (Periods 26)

- Concept of DBMS
- Objects in DBMS: Tables, Queries, Forms, Reports
- Creating data tables for accounting
- Using queries, forms and reports for generating accounting information.

  Applications of DBMS in generating accounting information such as shareholders' records, sales reports, customers' profile, suppliers' profile, payroll, employees' profile, petty cash register.

Unit 7: Accounting Applications of Electronic Spreadsheet (Periods 24)

- Concept of an Electronic Spreadsheet (ES)
- Features offered by Electronic Spreadsheet
- Applications of Electronic Spreadsheet in generating accounting information, preparing depreciation schedule, loan repayment schedule, payroll accouning and other such applications.

Unit 8: Practical Work in Computerised Accounting (Periods 22)

(Please refer to the guidelines published by the CBSE)

20. Entrepreneurship
(Code No. 066)

RATIONALE

Development of school curriculum is a dynamic process responsive to the society and reflecting the needs and aspiration of its learners. Fast changing society deserves changes in educational curriculum particularly to establish relevance to emerging socio-economic environment; to ensure equity of opportunity and participation and finally promoting concern for excellence. In this context the course on enterpreneurship aims at instilling and stimulating human urge for excellence by realizing individual potential for generating and putting to use the inputs, relevant to social prosperity and thereby ensure decent means of living for every individual.

OBJECTIVES

Acquiring Enterpreneurial Spirit and be Enterprising in all walks of life.

- Familiarization with various uses of human resource for earning decent means of living.
- Understanding the concept and process of enterpreneurship - its contribution and role in the growth and development of individual and the nation.
- Acquiring enterpreneurial quality, competency and motivation
- Learning the process and skills of creation and management of enterpreneurial venture.

CLASS XI

THEORY **Total Marks: 70**

Unit I: Enterpreneurship and Human Activities 30 Marks

A. Enterpreneurship

- Concept, Functions and need
- Enterpreneurship Characteristics and Competency
- Relevance of Enterpreneurship to Socio-Economic Gain: generating National Wealth, creating Wage and Self -Employment, Micro, Small and Medium Enterprises, Optimizing Human and Natural Resource and Solving Problems in the path of prosperity, building enterprising Personality and Society.
- Process of Enterpreneurship Development.

B. Enterpreneurial Pursuits and Human Activities:

- Nature, Purpose and pattern of Human Activities: Economic and Non-Economic, Need for innovation.
- Rationale and Relationship of Enterpreneurial pursuits and Human Activities.

Unit II: Acquiring Entrepreneurial Values and Motivation 30 Marks

- Enterpreneurial Values, Attitude and Motivation-Meaning and concept.
- Developing Enterpreneurial Motivation and Competency - concept and process of Achievement Motivation, Self-efficacy, Creativity, Risk Taking, Leadership, Communication and Influencing Ability and Planning Action.
- Barriers to Enterpreneurship
- Help and support to Enterprenuers

Unit III: Introduction to Market Dynamics 10 Marks

- Understanding a Market
- Competitive Analysis of the Market
- Patents, Trademarks and Copyright

PRACTICAL **30 Marks**

I. Study visit by students to any enterprise of own choice. With the help of a shedule/ questionnaire the students will record observation regarding - the background of enterpreneur, reasons for selecting the enterpreneurial career, starting the enterprise, the type of enterprise, the process of setting this enterprise, products/services, production process, investment made and marketing practices followed, profit or loss, growth and development, problems faced, institutions/organisations which offer support and enterpreneur's level and type of satisfaction.

II. Preparation of a brief report based on the observations made during study-visit to an enterprise.

CLASS XII

THEORY : **Total marks:70**

Unit I: Enterpreneurial Opportunities and Enterprise Creation 20 Marks

* Sensing Entrepreneurial Opportunities
* Environment Scanning
* Market Assessment
* Identification of Entreneurial Opporunities
* Selection of an Enterprise
* Steps in setting up of an Enterprise

Unit II: Enterprise Planning and Resourcing 20 Marks

* Business Planning - Preparation of a Project Report
* Resource Assessment -Financial and Non - Financial

* Fixed and Working Capital Requirement, Funds,
  Flows, Profit Ratios, Break Even Analysis etc.
* Mobilising Resources - Sources and Means of Fund, Facilities and Technologies for starting an Enterprise.

Unit III: Enterprise Management 30 Marks

(a) General management: Basic Management functions.

(b) Oranising/Production of goods and services - quality, quantity and flow of inputs.

(c) Managing Market:
  * Meaning, Function of Marketing, Marketing Mix
  * Product
  * Price
  * Place
  * Promotion (advertising and sales promotion)

(d) Managing Finance - Sources of Long Term and Short Term Finances
  * Determination of Cost, Income, Calculation of Profit/Loss.

(e) Managing Growth and Sustenance -Affecting Change, Modernisation, Expansion, Diversification and Substitution.

(f) Entrepreneurial Discipline - Laws of Land, Ecology, Consumer's Concept, Adherence to Contract and Credits.

PRACTICAL

Introduction:

The Main objective of the course in Entrepreneurship is to generate in the students initiative, self-reliance and enthusiam so as to empower them to become entrepreneurs both in spirit and performance. A number of skills such as observation, evalution, communication, resource mobilization and management, risk assessment ,team building etc. are also to be developed in the students. Leadership qualities, sensitivity to business ethics and adherence to a positive value system are the core issues that the course highlights while presenting different concepts related to entrepreneurship.

Such a course should necessarily have a strong expereriential component in the form of practial work. The objectives of the practical work are:

1 To introduce the students to the world of business by developing in them the core skills and competencies requried for an entrepreneur.

2. To develop in the students qualities such as leadership, self-confidence, initiative, facing uncertainties, commitment, creativity, people and team building, integrity and reliability.
3. To enable the students to acquire the skills and knowledge needed for conducting surveys, collecting, recording and interpreting data and preparing simple estimates of demand for products and services.
4. To guide the students to prepare a Project Report.
5. To equip the students with knowledge and skills needed to plan and manage an enterprise through case studies conducted and recorded by the students in different fields such as resource assessment, market dynamics, finance management, cost determination, calculation of profit and loss etc.
6. To instill in the students important values and entrepreneurial displine.

FORMAT

Total marks: 30

1.	Project Report/Survey Report	10 Marks
2.	Viva-Voce on PW /SR	05 Marks
3.	Case Study	10 Marks
4.	Problem Solving	05 Marks

1. Project Report/Market Survey Report 10 Marks

a) Project Report:

Prepartion of a Project Report for an enterprise involving products/services

Students may be provided adequate guidance to choose a project based on their interests and availability of information and authentic inputs in the locality. The specimen proforma of project report given in the textbook may be used for preparing the report. However, mechanical preparation of the report by filling in the information in the proforma should be discouraged. Further, as the students will be requried to appear for a Viva-voce on the basis of their projects, sufficient care should be taken by the students to prepare the report after studying the various aspects involved thoroughly. In a nutshell, the project report should lead to vialble enterprise.

b) Market Survey Report

Market research is the process and techique of finding out who your potential customers are and what they want. The survey may be on products and services already available in the market or students may also conduct surveys for new products and services. The report of the survey should be organised under the following broad headings:

1. Objectives.
2. Methods and tools (interviews ,questionnaires etc.) to be used to collect information.

3. Records of data and information.
4. Analysis of data and information.
5. Interpretation and conclusion.

For example, a survey may be conducted to find out the choice of households in toiletry soap, tooth paste etc. The data may be analysed to establish a pattern that may be useful to an entrepreneur.

Guidelines for assessment of Project Report / Survey Report

1. Presentation: Format, Clarity, Use of graphs ,tables and other visuals, organisation, methodical recording of data and information and general neatness of execution. 5 marks
2. Originality and Creativity 3 marks
3. Authenticity of information and correctness of calculations and general feasibility of the project/ sustainability of conclusion drawn in the survey. 2 marks

2. Viva Voce on the Project /Market Survey Report 5 Marks

The questions should establish that the report is the original work of the student and that the student has a reasonably clear understanding of the work carried out by him/her.

Enterpreneurial qualities such as leadership, self-belief, creativity, originality, initiative etc. may also be assessed by asking a variety of questions related to the report.

3. Case Study 10 marks

A case study is a focused research on an organisation, enterprise, practice, behaviour or person undertaken to highlight an aspect that the study attemps to examine. For instance, a case study may be conducted on the pollution control methods being employed by an industry. Or a successful industrialist may be chosen as a subject of a case study to analyze and understand the strategies that the industrialist adopted :to achieve success.

Ideally, a case study should be conducted on subjects with the objectives of bringing to the fore beliefs, practices, strategies, values etc. that have made them what they are. Such studies help us to understand the way in which great minds think and operate. We may also conduct case studies on faliures; why a company collapsed, how a service lost its market etc. From both the types of case study, we learn lessons; how to do something or how not to do something. They also provide valuable insight into the processes involved in an enterprise.

A few topics are suggested for carrying out case studies:

i) Drawing a profile of a successful entrepreneur.
ii) Studying a public sector undertaking and highlighting its sucess/failure, by analyzing the factors responsible.
iii) Studying a small scale unit in the locality to bring out the procedures and processes adopted by the unit to become a feasible business venture.
iv) A study of competition in business by choosing two or more rivals in the market and analyzing their strengths and weaknesses.

v) Take the school itself for a case study and analyze any two aspects of the school plant for chalking out a plan of action: infrastructure, academics, co-curricular activities etc.

vi) A case study on a thriving fast food shop/restaurant in your locality. What makes it so popular?

vii) A case study on the ways in which a business unit has mobilised its financial resources.

viii) A case study on the enterprise management techniques adopted by a business house.

ix) A case study on the marketing strategies of a sucessful consumer durable company.

x) A case study on the financial management of a Public Limited Company.

xi) A case study on any Specialized Institution that supports and guides the establishment of a small scale unit.

xii) Studying the balance sheets of two big private companies to assess their trade and credit worthiness.

xiii) Studying the inventory management of a large manufacturing industry to ascertain the processes involved for optimizing cost.

xiv) Carrying out a case study on an established industrial house/company to find out the value system of the company and how it fulfils its social commitment/obligations.

xv) Carrying out a case study on an established industry to ascertain the processes followed to reduce/prevent pollution.

xvi) Study on enviourment friendly companies and their contribution to preservation.

Assessment of Case Studies

i)	Presentation: Format, accuracy, clarity, authenticity and general neatness	7 marks
ii)	Analysis and Conclusions	3 marks

4. Problem Solving **5 marks**

In this session, the students will be requried to solve a problem in the form of a written test. The examiner may choose any problem related to the units in class XII Text Book and set it for the class. The problem may be in the following areas:

a. How to scan the environment to establish the feasibility of a project.

b. Given certain figures showing the consumption pattern of a product, drawing conclusions that have a bearing on similar products.

c. Carrying out market assessment for a given product/service to ascertain the feasibility factor.

d. Assessment of Working Capital.

e. Calculation of total cost of production.

f. Calculation of break-even point.

g. Determining location of a manufacturing unit.

h. Problems in inventory control (calculation of the Economic Order Quantity and carrying out ABC analysis).

i. Applying Pricing methods to determine the price of a product or service.

j. Applying promotion mix to plan a sales campaign for a product or service.

k. Working out a simple budget for a given task or job.

Assessment of Answers

The examiner may prepare five problems which are solved by him/her before they are presented to the students. The student may choose anyone of the problems and solve it, showing the different steps/different reasons involved in the solution. If the problem does not involve actual calculations, it may not have anyone correct answer. So weightage should be given not only to the final answer but to the entire process of problem solving that the student has followed. Originality and innovative spirit should be rewarded. The students should not be penalized for spelling errors grammatical mistakes etc. as long as the answer is coherent. Where definite formulas are involved, accuracy should be given due weightage.

LIST OF SUGGESTED REFERENCE BOOKS

01. Entrepreneurship - Class XI - C. B. S. E., Delhi.

02. Entrepreneurship - Class XII- C. B. S. E., Delhi.

03. Udamita (in Hindi) by Dr. M M.P. Akhouri and

    S.P Mishra, pub. by National Institute for Entrepreneurship and Small Business Development (NIESBUD), NSIC-PATC Campus, Okhla.

04. Trainer's Manual on Developing Entrepreneurial Motivation, By M.M.P. Aukhori, S.P. Mishra and R. Sengupta, Pub. by (NIESBUD), NSIC-PATC Campus, Okhla.

05. Behavioral Exercises and games - manual for trainers, learning systems, by M. V. Despande, P. Mehta and M. Nandami.

06. Product Selection by Prof. H.N. Pathak, Pub. By (NIESBUD), NSIC-PATC Campus, Okhla.

07. Entrepreneurial Development - Dr. S. Moharana and Dr. C.R.Dash, Pub. by RBSA Publishers, Jaipur.

08. Entreprenurial Development by S.S.Khanna, Published by S.Chand & Company Ltd., Ram Nagar, New Delhi.

09. Entrepreneurial Development by C.B. Gupta and N.P.Srinivasan, Publisher Sultan Chand & Sons, 1992.

10. Entrepreneurship Development - Principles, Policies and Programmes by P. Saravanavel, Publishers Ess Pee Kay Publishing House, Madras.

11. Entrepreneurship, Growth and Development, by Rashi Ali, Pub. by Chugh Publication and Strech Road, Civil Lines, Post Box No. 101, Allahabad-211991.

12. Entrepreneur and Entrepreneurship Development and Planning in India, by D.N.Mishra, pub. by Chugh Publication, Allahabad.

13. Aoudhogik Disha Nirdesh (in Hindi) Pub. by Centre for Entrepreneurship Development, M.P. (CEDMAP), 60, Jail Road, Jhangerbad, Bhopal-462008.

14. Entrepreneur, Industry and Self-employment Project, Part-l and 2(in Hindi), Pub. by Centre for Entrepreneurship Development, M.P. (CEDMAP), 60 Jail Road, Jhangerbad, Bhopal-462008.

15. Small Scale Industry & Self-Employment Projects, Part-l and 2 (in Hindi), Pub. by Centre for Entrepreneurship Development, M.P. (CEDMAP),60 Jail Road, Jhangerbad Bhopal.

Magazines

01. Udyamita Samachar Patra,(Monthly, Hind), Pub. by Centre for Entrepreneurship Development, M.P.(CEDMAP), 60 Jail Road, Jhangerbad, Bhopal-462008.

02. Science Tec. Entrepreneur (A Bi Monthly Publication), centre for Enterprenurship Development, M.P. (CEDMAP), 60 Jail Road, Jhangerbad , Bhopal -462008.

03. Laghu Udhyog Samachar.

04. Project Profile by DCSSI.

05. Project Profile by Pub. Centre for Enterpreeurship Development, M.P. (CEDMAP), 60 Jail . Road, Jhangerbad, Bhopal-462008.

21. History (Code No. 027)

Rationale

Through a focus on a series of critical historical issues and debates (class XI) or on a range of important historical sources (class XII), the students would be introduced to a set of important historical events and processes. A discussion of these themes, it is hoped, would allow students not only to know about these events and processes, but also to discover the excitement of doing history.

Objectives

- Effort in these senior secondary classes would be to emphasize to students that history is a critical discipline, a process of enquiry, a way of knowing about the past, rather than just a collection of facts. The syllabus would help them understand the process through which historians write history, by choosing and assembling different types of evidence, and by reading their sources critically. They will appreciate how historians follow the trails that lead to the past, and how historical knowledge develops

- The syllabus would also enable students to relate/compare developments in different situations, analyze connection between similar processes located in different time periods, and discover the relationship between different methods of social enquiry within different social sciences.

- The syllabus in class XI is organized around some major themes in world history. The themes have been selected so as to (i) focus on some important developments in different spheres - political, social, cultural and economic, (ii) study not only the grand narratives of development - urbanization, industrialization and modernization - but also to know about the processes of displacements and marginalization. Through the study of these themes students will acquire a sense of the wider historical processes as well as an idea of the specific debates around them.

- The treatment of each theme in class XI would include (a) a road picture of the theme under discussion, (b) a more detailed focus on one region of study, (c) an introduction to a critical debate associated with the issue.

- In class XII the focus will shift to a detailed study of some themes in Ancient, Medieval and Modern Indian history. The object would be to study a set of these themes in some detail and depth rather than survey the entire chronological span of Indian .history. In this sense the course will built on the knowledge that the students have acquired in the earlier classes.

- Each theme in class XII will also introduce the student to one type of source for the study of history. Through such a study students would begin to see what different types of sources can reveal and what they cannot tell. They would come to know how historians analyze these sources, the problems and difficulties of interpreting each type of source, ‘and the way a larger picture of an event, a historical process, or a historical figure, is built by looking at different types of sources.

- Each theme for class XII will be organized around four subheads: (a) a detailed overview of the events, issues and processes under discussion, (b) a summary of the present state of research on the theme, (c) an account of how knowledge about the theme has been acquired, (d) an excerpt from a primary source related to the theme, explaining how it has been used by historians.
- While the themes in both these classes (XI and XII) are arranged in a broad chronological sequence, there are overlaps between them. This is intended to convey a sense that chronological divides and periodization do not always operate in a neat fashion.
- In the textbooks each theme would be located in a specific time and place. But these discussions would be situated within a wider context by (a) plotting the specific event within time-lines, (b) discussing the particular event or process in relation to developments in other places and other times.

Class XI

Paper One **Time: 3 hours** **100 Marks**

Units		Periods	Marks
1.	**Introduction to World History**	8	-
Section A: Early Societies		32	15
2.	Introduction	6	
3.	From the beginning of time	14	
4.	Early Cities	12	
Section B: Empires		**40**	**25**
5.	Introduction	6	
6.	An empire across three continents	12	
7.	Central Islamic lands	12	
8.	Nomadic Empires	10	
Section C: Changing Traditions		**44**	**25**
9.	Introduction	6	
10.	Three orders	12	
11.	Changing cultural traditions	14	
12.	Confrontation of cultures	12	
Section D: Paths to Modernization		**46**	**25**
13.	Introduction	8	
14.	The Industrial Revolution	12	
15.	Displacing indigenous People	12	
16.	Paths to modernization	14	
	Map work (units 1-16)	**10**	**10**

Class XI: Themes in World History

Themes	Periods	Objectives
1. Introduction to World History	**(8)**	
SECTION A: EARLY SOCIETIES		
2. Introduction	**(6)**	
3. From the Begining of Time Focus: Africa, Europe till 15000 BC (a) Views on the origin of human beings. (b) Early societies. (c) Historians' views on present-day hunting-gathering societies.	**(14)**	❑ Familiarize the learner with ways of reconstructing human evolution. Discuss whether the experience of present-day hunting-gathering people can be used to understand early societies.
4. Early Cities Focus: Iraq, 3rd millennium BC (a) Growth of towns. (b) Nature of early urban societies. (c) Historians' Debate on uses of writing.	**(12)**	❑ Familiarize the learner with the nature of early urban centres. ❑ Discuss whether writing is significant as a marker of civilization.
SECTION B: EMPIRES		
5. Introduction	**(6)**	
6. An Empire across Three Continents Focus: Roman Empire, 27 B.C to A.D 600. (a) Political evolution (b) Economic expansion (c) Religion (d) Late Antiquity. (e) Historians views on the institution of Slavery.	**(12)**	❑ Familiarize the learner with the history of a major world empire ❑ Discuss whether slavery was a significant element in the economy.
7. Central Islamic Lands: Focus: 7th to 12th centuries (a) Polity (b) Economy (c) Culture. (d) Historians viewpoints on the nature of the crusades.	**(12)**	❑ Familiarize the learner with the rise of Islamic empires in the Afro-Asian territories and its implications for economy and society. ❑ Understand what the crusades meant in these regions and how they were experienced.
8. Nomadic Empires: Focus: the Mongol, 13th to 14th century (a) The nature of nomadism. (b) Formation of empires. (c) Conquests and relations with other states. (d) Historians' views on nomadic societies and state formation.	**(10)**	❑ Familiarize the learner with the varieties of nomadic society and their institutions. ❑ Discuss whether state formation is possible in nomadic societies.

Themes	Objectives
SECTION C: CHANGING TRADITIONS	
9. Introduction (6)	
10. Three Orders (12) Focus: Western Europe, 13th-16th century (a) Feudal society and economy: (b) Formation of states. (c) Church and Society. (d) Historian's views on decline of feudalism	❑ Familiarize the learner with the nature of the economy and society of this period and the changes within them. ❑ Show how the debate on the decline of feudalism helps in understanding processes of transition.
11. Changing cultural traditions (14) Focus on Europe, 14th to 17th century'. (a)New ideas, and new trends in literature and arts. (b) Relationship with earlier ideas (c) The contribution of West Asia. (d) Historian's view points on the validity of the notion 'European Renaissance'.	❑ Explore the intellectual trends in the period. ❑ Familiarize students with the paintings and buildings of the period ❑ Introduce the debate around the idea of 'Renaissance'.
12. Confrontation of Cultures (12) Focus on the America 15th to 18th century. (1)European voyages of exploration. (b) Search for gold; enslavement, raids, extermination. (c) Indigenous people and cultures - the Arawaks, the Aztecs, the Incas. (c) The history of displacements. (d) Historian's view points on the slave trade,	❑ Discuss changes in European economy that led to the voyages. ❑ Discuss the implications of the conquests for the indigenous people. ❑ Explore the debate on the nature of the slave trade and see what this debate tells us about the meaning of these "discoveries".
SECTION D: PATHS TO MODERNIZATION	
13. Introduction (8)	
14. The Industrial Revolution. (12)	
Focus on England, 18th and 19th century. (a) Innovations and technological change (b) Patterns of growth. (c) Emergence of a working class. (d) Historians' viewpoints Debate, 'Was there an Industrial Revolution?	❑ Understand the nature of growth in the period and its limits. ❑ Initiate students to the debate on the idea of industrial revolution.

Themes	Objectives
15. Displacing indigenous People. (12) Focus on North America and Australia, I8th-20th century, (a) European colonists in North America and Australia. (b) Formation of white settler societies. (c) Displacement and repression of local people, (d) Historians view points on the impact of European settlement on indigenous population.	❑ Sensitize students to the processes of displacements that accompanied the development of America and Australia. ❑ Understand the implications of such processes for the displaced populations.
16. Paths to Modernization. (14) Focus on East Asia. Late 19th and 20th century. (a) Militarization and economic growth in Japan. (b) China and the Communist alternative. (d) Historians' Debate on meaning of modernization	❑ Make students aware that. transformation in the modern world takes many different forms. ❑ Show how notions like 'modernization' need to be critically assessed.
17. Map Work on Units 1-15 (10)	

Class XII

Time: 3 hours

Paper One **100 Marks**

Units	Marks
Section A: Archaeology & Ancient India Unit 1 - 4	25
Section B: Medieval India Unit 5 - 9	30
Section C: Modern India Unit 10 - 15	35
Unit 16 : Map Work	10

Class XII: Themes in Indian History	
Themes	**Objectives**
SECTION A: ARCHAEOLOGY & ANCIENT INDIA **1. The Story of the First Cities: Harappan Archaeology.** **Broad overview:** Early urban centres. . **Story of discovery:** Harappan civilization **Excerpt:** Archaeological report on a major site. **Discussion:** how it has been utilized by archaeologists/historians.	❑ Familiarize the learner with early urban centres as economic and social institutions. ❑ Introduce the ways in which new data can lead to a revision of existing notions of history. ❑ Illustrate how archaeological reports are analyzed and interpreted by scholars.
2. Political and Economic History: How Inscriptions tell a story. **Broad overview:** Political and economic history from the Mauryan to the Gupta period. **Story of discovery:** Inscriptions and the decipherment of the script. Shifts in the understanding of political and economic history. **Excerpt:** Asokan inscription and Gupta period land grant. **Discussion:** Interpretation of inscriptions by historians.	❑ Familiarize the learner with major trends in the political and economic history of the subcontinent. ❑ Introduce inscriptional analysis and the ways in which these have shaped the understanding of political and economic processes.
3. Social Histories: Using the Mahabharata **Broad overview:** Issues in social history, including caste, class, kinship and gender. **Story of discovery:** Transmission and publications of the Mahabharat. **Excerpt:** from the Mahabharata, illustrating how it has been used by historians. **Discussion:** Other sources for reconstructing social history.	❑ Familiarize the learner with issues in social history. introduce strategies of textual analysis and their use in reconstructing social history.
4. A History of Buddhism: Sanchi Stupa **Broad overview:** (a) A brief review of religious histories of Vedic religion, Jainism, Vaisnavism, Saivism. (b) Focus on Buddhism. **Story of discovery:** Sanchi stupa **Excerpt:** Reproduction of sculptures from Sanchi. **Discussion:** Ways in which sculpture has been interpreted by historians, other sources for reconstructing the history of Buddhism.	❑ Discuss the major religious developments in early India. ❑ Introduce strategies of visual analysis and their use in reconstructing histories of religion.

Themes	Objectives
SECTION B: MEDIEVAL INDIA **5. Agrarian Relations: The *Ain-i- Akbari*** **Broad overview:** (a) Structure of agrarian relations in the 16th and 17th centuries. (b) Patterns of change over the period. **Story of Discovery:** Account of the compilation and translation of *Ain-i-Akbari.* **Excerpt:** from the *Ain-i-Akbari* **Discussion:** Ways in which historians have used the text to reconstruct history.	❑ Discuss developments in agrarian relations ❑ Discuss how to supplement official documents with other sources.
6. The Mughal Court: Reconstructing Histories through Chronicles **Broad Overview:** (a) Outline of political history 15th-17th centuries. (b) Discussion of the Mughal court and politics. **Story of Discovery:** Account of the production of court chronicles, and 'their subsequent. translation and transmission. **Excerpts:** from the *Akbarnama* and *Padshahnama.* **Discussion:** Ways in which historians have used the texts to reconstruct political histories.	❑ Familiarize the learner with the major landmarks in political history ❑ Show how chronicles and other sources are used to reconstruct the histories of political institutions.
7. New Architecture: Hampi **Broad Overview:** (a) Outline of new buildings during Vijayanagar period-temples, forts, irrigation facilities. (b) Relationship between architecture and the political system.. **Story of Discovery:** Account of how Hampi was found. **Excerpt:** Visuals of buildings at Hampi **Discussion:** Ways in which historians have analyzed and interpreted these structures.	❑ Familiarize the learner with the new buildings that were built during the time. ❑ Discuss the ways in which architecture can be analyzed to reconstruct history.
8. Religious Histories:The Bhakti-Sufi tradition **Broad Overview:** (a) Outline of religious developments during this period. (b) Ideas and practices of the Bhakti-Sufi saints. **Story of Transmission:** How Bhakti-Sufi compositions have been preserved. **Excerpt:** Extracts from selected Bhakti Sufi works. **Discussion:** Ways in which these have been interpreted by historians.	❑ Familiarize the learner with religious developments. ❑ Discuss ways of analyzing devotional literature as sources of history.

Themes	Objectives
9. Medieval Society Through Travellers' Accounts **Broad Overview:** Outline of social and cultural life as they appear in travellers' accounts. **Story of their writings:** A discussion of where they travelled, why they travelled, what they wrote, and for whom they wrote. **Excerpts:** from Alberuni, Ibn Batuta, Bernier. **Discussion:** What these travel accounts can tell us and how they have been interpreted by historians.	❑ Familiarize the learner with the salient features of social histories described by the travellers. ❑ Discuss how travellers' accounts can be used as sources of social history.
SECTION C: MODERN INDIA **10. Colonialism and-Rural Society: Evidence from Official Reports'** **Broad overview :** (a). Life of zamindars, peasants and artisans in the late 18 century (b) East India Company, revenue settlements and surveys. (c) Changes over the nineteenth century. **Story of official records:** An account of why official investigations into rural societies were under taken and the types of records and reports produced. **Excerpts:** From Firminger's Fifth Report, Accounts of Frances Buchanan-Hamilton, and Deccan Riots Report, **Discussion:** What the official records tell and do not tell, and how they have been used by historians.	❑ Discuss how colonialism affected Zamindars, peasants and artisans. ❑ Understand the problems and limits of using official sources for understanding the lives of people.
11. Representations of 1857 **Broad Overview:** (a) The events of 1857-58. (b) How these events were recorded and narrated. **Focus:** Lucknow. **Excerpts:** Pictures of 1857. Extracts from contemporary accounts. **Discussion:** How the pictures of 1857 shaped British opinion of what had happened.	❑ Discuss how the events of 1857 are being reinterpreted. ❑ Discuss how visual material can be used by historians
12. Colonialism and Indian Towns: Town Plans and Municipal Reports **Broad Overview:** The growth of Mumbai, Chennai, hill stations and cantonments in the	❑ Familiarize the learner with the history of modern urban

Themes	Objectives
18th and 19th century. **Excerpts:** Photographs and paintings. Plans of cities. Extract from town plan reports. Focus on Kolkata town planning. **Discussion:** How the above sources can be used to reconstruct the history of towns. What these sources do not reveal.	centres. ❑ Discuss how urban histories can be written by drawing on different types of sources.
13. Mahatma Gandhi through Contemporary Eyes **Broad Overview:** (a) The nationalist movement 1918 - 48, (b) The nature of Gandhian politics and leadership. **Focus:** Mahatma Gandhi in 1931. **Excerpts:** Reports from English and Indian language newspapers and other contemporary writings. **Discussion:** How newspapers can be a source of history.	❑ Familiarize the learner with significant elements of the nationalist movement and the nature of Gandhian leadership. ❑ Discuss how Gandhi was perceived by different groups. ❑ Discuss how historians need to read and interpret newspapers, diaries and letters as historical source.
14. Partition through Oral Sources **Broad Overview:** (a) The history of the 1940s; (b) Nationalism. Communalism and Partition. **Focus:** Punjab and Bengal. **Excerpts:** Oral testimonies of those who experienced partition. **Discussion:** Ways in which these have been analyzed to reconstruct the history of the event.	❑ Discuss the last decade of the national movement, the growth of communalism and the story of Partition. ❑ Understand the events through the experience of those who lived through these years of communal violence. ❑ Show the possibilities and limits of oral sources.
15. The Making of the Constitution **Broad Overview:** (a) Independence and the new nation state. (b) The making of the constitution. . **Focus:** The Constitutional Assembly debates. **Excerpts:** from the debates. **Discussion:** What such debates reveal and how they can be analyzed.	❑ Familiarize students with the history of the early years after independence. ❑ Discuss how the founding ideals of the new nation state were debated and formulated. ❑ Understand how such debates and discussions can be read by historians.
16. Map Work on Units 1-15	

22. Political Science (Code No 028)

Rationale

At the senior secondary level students who opt Political Science are given an opportunity to get introduced to the diverse concerns of a Political Scientist. At this level there is a need to enable students to engage with political processes that surround them and provide them with an understanding of the historical context that has shaped the present. The different courses introduce the students to the various streams of the discipline of political science: political theory, Indian politics and international politics. Concerns of the other two streams — comparative politics and public administration — are accommodated at different places in these courses. In introducing these streams, special care has been taken not to burden the students with the current jargon of the discipline. The basic idea here is to lay the foundations for a serious engagement with the discipline at the undergraduation stage.

Objectives:

INDIAN CONSTITUTION AT WORK

- Enable students to understand historical processes and circumstances in which the Constitution was drafted.
- Provide opportunity for students to be familiar with the diverse visions that guided the makers of the Indian Constitution.
- Enable students to identify the certain key features of the Constitution and compare these to other constitutions in the world.
- Analyse the ways in which the provisions of the Constitution have worked in real political life.

POLITICAL THEORY

- Develop the skills for logical reasoning and abstraction
- Inculcate attention to and respect for viewpoints other than one's own
- Introduce students to the different political thinkers in relation to a concept and in everyday social life
- Enable students to meaningfully participate in a concern of current political life that surrounds them
- Encourage the students to analyse any unexamined prejudices that one may have inherited.

POLITICS IN INDIA AFTER INDEPENDENCE

- Enable students to be familiar with some of the key political events and figures in the post-independence period.
- Develop skills of political analysis through events and processes of recent history.
- Develop their capacity to link macro processes with micro situations and their own life.

- Encourage the students to take a historical perspective of making sense of the contemporary India.

CONTEMPORARY WORLD POLITICS

- Enable the students to expand their horizon beyond India and make sense of the political map of contemporary world.
- Familiarise the students with some of the key political events and processes in the post cold war era.
- Equip students to be conscious of the way in which global events and processes shape our everyday lives.
- Strengthen their capacity for political analysis by thinking of contemporary developments in a historical perspective.

Class XI

One Paper **Time 3hrs.** **Marks 100**

Units		Periods	Marks
Part A: Indian Constitution at work			
1.	Making of the Constitution	8	4
2.	Fundamental Rights	10	4
3.	System of representational democracy	12	6
4.	Executive in a parliamentary system	15	8
5.	Legislature at the Central and state level	15	8
6.	Judiciary	12	6
7.	Federalism	8	4
8.	Local Government	8	4
9.	Constitution as a living document.	8	6
10.	Political Philosophy underlying the constitution	8	
		104	**50**
Part B: Political Theory			
11.	Introduction to Political Theory	10	6
12.	Freedom	10	14
13.	Equality	12	
14.	Social Justice	12	
15.	Rights	12	8
16.	Citizenship	12	6
17.	Nationalism	10	4
18.	Secularism	10	6
19.	Peace	8	6
20.	Development	8	
		104	**50**

Course Content:

Part A: Indian Constitution at work

1. **Making of the constitution:** **8 Periods**

   Why do we need a constitution? What does a constitution do? Who made our constitution? How did the country's partition affect the working of the Constituent Assembly? What were the sources of the constitution?

2. **Fundamental Rights:** **10**

   Why do we need bill of rights in a constitution? What are the fundamental rights provided by the constitution? Why was the right to property removed from fundamental rights? How have the interpretations by the courts influenced fundamental rights? How has provision of fundamental rights provided the basis for civil liberties movement in India? What are the fundamental duties? What are Directive principles of state policy? To what extent they have been implemented?

3. **System of representational democracy:** **12**

   What are the different methods of representations? How do these methods affect parties and politics? Why was the first past the post system chosen in India? What have been the effects of this system? Why is there a system of reserved seats? What are the provisions to ensure free and fair elections? What does the Election Commission do?

4. **Executive in a parliamentary system:** **15**

   What is executive? Why was the parliamentary system chosen over other forms of government? Why does the parliamentary system need a constitutional head? How are the prime minister and the chief ministers elected? What are the powers of the President of India? What are the powers of the Prime Minister, the Chief Minister and the Council of Ministers? What are the powers of the governor?

5. **Legislature at the central and state level:** **15**

   What is the need of parliament? Why does the parliament of India have two Houses? How are the parliament and the state assemblies constituted? What are the powers of the Rajya Sabha and Lok Sabha? How are the laws passed? How is the executive made accountable? What are the constitutional means to prevent defection?

6. **Judiciary:** **12**

   What is Rule of law? Why do we need an independent judiciary? What are the provisions that ensure the independence of judiciary in India? How are judges appointed? What are the powers of the Supreme and the High courts? How do they use their jurisdiction for public interest.

7. **Federalism:** **8**

   What is federalism? How does federalism ensure accommodation of diversities? In which ways is the Indian constitution federal? In which ways does the constitution strengthen the centre? Why are there special provisions for some states and areas?

8. Local government **8**

Why do we need decentralisation of power? What has been the status of local government in the constitution? What are the basic features of rural and urban local governments? What has been the effect of giving constitutional status to local governments?

9. Constitution as a living document **8**

How has the constitution changed since its inception? What is the Amendment Procedure of the constitution? What further changes are being debated? How has the working of democracy affected the constitution?

10. Political philosophy underlying the constitution: **8**

What are the core provisions of the constitution? What is the vision underlying these core provisions? How is this vision shaped by modern Indian political thought?

PART B: POLITICAL THEORY

11. Introduction to Political Theory **10**

What is politics? Do we find politics in seemingly non-political domains? Can political arguments be resolved through reasoning? Why do we need political theory?

12. Freedom **10**

What is freedom? What are reasonable constraints on individual liberty? How are the limits defined?

13. Equality **12**

Do all differences involve inequality? Does equality imply sameness? What are the major forms of inequality? How can equality be realized?

14. Social Justice **12**

Is justice all about fairness? What is the relationship between justice and equality? What are the different forms of injustice? In which ways can justice be secured?

15. Rights **12**

How is a right different from any claim? What are the major kinds of right claims? How do we resolve a conflict between individual and community rights? How does the state enable and obstruct rights?

16. Citizenship **12**

Who is a citizen? What are relevant grounds for inclusion and exclusion? How are new claims to citizenship negotiated? Can we have a global citizenship?

17. Nationalism **10**

How are the boundaries of a nation defined? Must every nation have a state? What demands can a nation make on its citizens? What is the basis of the right to self-determination?

18. Secularism **10**

What is secularism? Which domains of life does it relate to? What is a secular state? Why do we need secular state in modern times? Is secularism suitable for India?

19. Peace **8**

What is peace? Does peace always require non-violence? Under what conditions is war justified? Can armament promote global peace?

20. Development **8**

What is development? Is there a universally accepted model of development? How to balance the claims of present generation with claims of future generations?

Class XII

Units		Periods	Marks
Part A: Contemporary World-Politics			
1.	Cold War Era in World Politics	14	8
2.	Disintegration of the Second World and the Collapse of Bipolarity	12	12
3.	US Dominance in World Politics	12	
4.	Alternative centres of Economic and Political Power	10	10
5.	South Asia in the Post-cold war Era	12	
6.	International organizations in a unipolar world	12	6
7.	Security in Contemporary World	12	4
8.	Globalisation and its Critics	12	6
		96	46
Part B: Politics in India since independence			
9.	Era of one-party dominance	12	6
10.	Nation-Building and its problems	12	10
11.	Politics of Planned Development	10	
12.	India's External relations	12	6
13.	Challenges to and Restoration of Congress System	10	4
14.	Crisis of the Constitutional order	14	10
15.	Regional aspirations and conflicts	10	4
16.	Rise of New Social Movements	12	6
17.	Democratic upsurge and coalition parties	10	4
18.	Recent issues and challenges	10	4
		112	54

COURSE CONTENTS **Periods**

Part A: Contemporary world Politics

Course Content: **Periods**

1. **Cold War Era in World Politics** **14**

   Emergence of two power blocs after the second world war. Arenas of the cold war. Challenges to Bipolarity: Non Aligned Movement, quest for new international economic order. India and the cold war.

2. **Disintegration of the 'Second World' and the Collapse of Bipolarity.** **12**

   New entities in world politics: Russia, Balkan states and Central Asian states, Introduction of democratic politics and capitalism in post-communist regimes. India's relations with Russia and other post-communist countries.

3. **US Dominance in World Politics:** **12**

   Growth of unilateralism: Afghanistan, first Gulf War, response to 9/11 and attack on Iraq. Dominance and challenge to the US in economy and ideology. India's renegotiation of its relationship with the USA.

4. **Alternative Centres of Economic and Political Power:** **10**

   Rise of China as an economic power in post-Mao era, creation and expansion of European Union, ASEAN. India's changing relations with China.

5. **South Asia in the Post-Cold War Era:** **12**

   Democratisation and its reversals in Pakistan and Nepal. Ethnic conflict in Sri Lanka, Impact of economic globalization on the region. Conflicts and efforts for peace in South Asia. India's relations with its neighbours.

6. **International Organizations in a unipolar World:** **12**

   Restructuring and the future of the UN. India's position in the restructured UN. Rise of new international actors: new international economic organisations, NGOs. How democratic and accountable are the new institutions of global governance?

7. **Security in Contemporary World:**

   Traditional concerns of security and politics of disarmament. Non-traditional or human security: global poverty, health and education. Issues of human rights and migration.

8. **Globalisation and Its Critics.** **12**

   Economic, cultural and political manifestations. Debates on the nature of consequences of globalisation. Anti-globalisation movements. India as an arena of globalization and struggle against it.

Part B: Politics of India Since Independence

9. Era of One-Party Dominance: 12

First three general elections, nature of Congress dominance at the national level, uneven dominance at the state level, coalitional nature of Congress. Major opposition parties.

10. Nation-Building and Its Problems: 12

Nehru's approach to nation-building: Legacy of partition: challenge of 'refugee' resettlement, the Kashmir problem. Organisation and reorganization of states; Political conflicts over language.

11. Politics of Planned Development 10

Five year plans, expansion of state sector and the rise of new economic interests. Famine and suspension of five year plans. Green revolution and its political fallouts.

12. India's External Relations 12

Nehru's foreign policy. Sino-Indian war of 1962, Indo-Pak war of 1965 and 1971. India's nuclear programme and shifting alliances in world politics.

13. Challenge to and Restoration of Congress System: 10

Political succession after Nehru. Non-Congressism and electoral upset of 1967, Congress split and reconstitution, Congress' victory in 1971 elections, politics of 'garibi hatao'.

14. Crisis of the Constitutional Order:

Search for 'committed' bureaucracy and judiciary. Navnirman movement in Gujarat and the Bihar movement. Emergency: context, constitutional and extra-constitutional dimensions, resistance to emergency. 1977 elections and the formation of Janata Party. Rise of civil liberties organisations.

15. Regional Aspirations and Conflicts 10

Rise of regional parties. Punjab crisis and the anti-Sikh riots of 1984. The Kashmir situation. Challenges and responses in the North East.

16. Rise of New Social Movements: 12

Farmers' movements, Women's movement, Environment and Development-affected people's movements. Implementation of Mandal Commission report and its aftermath.

17. Democratic Upsurge and Coalition Politics 10

Participatory upsurge in 1990s. Rise of the JD and the BJP. Increasing role of regional parties and coalition politics. UF and NDA governments. Elections 2004 and UPA government.

18. Recent issues and challenges 10

Challenge of and responses to globalization: new economic policy and its opposition. Rise of OBCs in North Indian politics. Dalit politics in electoral and non-electoral arena. Challenge of communalism: Ayodhya dispute, Gujarat riots.

23. Geography (Code No. 029)

Rationale

Geography is introduced as an elective subject at the senior secondary stage. After ten years of general education, students branch out at the beginning of this stage and are exposed to the rigours of the discipline for the first time. Being an entry point for the higher education, students choose geography for pursuing their academic interest and, therefore, need a broader and deeper understanding of the subject. For others, geographical knowledge is useful in daily lives because it is a valuable medium for the education of young people. Its contributions lie in the content, cognitive processes, skills and values that geography promotes and thus helps the students explore, understand and evaluate the environmental and social dimensions of the world in a better manner.

Since geography explores the relationship between people and their environment, it includes studies of physical and human environments and their interactions at different scales-local, state/region, nation and the world. The fundamental principles responsible for the varieties in the distributional pattern of physical and human features and phenomena over the earth's surface need to be understood properly. Application of these principles would be taken up through selected case studies from the world and India. Thus, the physical and human environment of India and study of some issues from a geographical point of view will be covered in greater detail. Students will be exposed to different methods used in geographical investigations.

Objectives

The course in geography will help learners:

- Familiarise themselves with the terms, key concepts and basic principles of geography;
- Search for, recognize and understand the processes and patterns of the spatial arrangement of the natural as well as human features and phenomena on the earth's surface;
- Understand and analyse the inter-relationship between physical and human environments and their impact;
- Apply geographical knowledge and methods of inquiry to new situations or problems at different levels-local, regional, national and global;
- Develop geographical skills, relating to collection, processing and analysis of data/ information and preparation of report including maps and graphs and use of computers whereas possible; and
- Utilize geographical knowledge in understanding issues concerning the community such as environmental issues, socio-economic concerns, gender and become responsible and effective member of the community.

Class XI

One Theory Paper		3 Hours	70 Marks
Part A.	**Fundamentals of Physical Geography**		**35 (Marks)**
	Unit-1: Geography as a discipline		3
	Unit-2: The Earth		5
	Unit-3: Landforms		8
	Unit-4: Climate		10
	Unit-5: Water (Oceans)		4
	Unit-6: Life on the Earth		3
	Unit-7: Map work		2
Part B.	**India- Physical Environment**		**35 (Marks)**
	Unit-8: Introduction		3
	Unit-9: Physiography		10
	Unit-10: Climate, vegetation and soil		10
	Unit-11: Natural hazards and Disasters		9
	Unit-12: Map Work		3
Part C.	**Practical Work**	**3 Hours**	**30 Marks**
	Unit-1: Fundamentals of Maps		10
	Unit-2: Topographic and Weather Maps		15
	Unit-3 : Practical Record Book & Viva		5

Part A: Fundamentals of Physical Geography (Periods 75)

Unit-1: Geography as a Discipline (Periods 3)

Geography as an integrating discipline, as a science of spatial attributes;
Branches of geography; importance of physical geography

Unit-2: The Earth (Periods 10)

Origin and evolution of the earth; Interior of the earth; Wegener's continental drift theory and plate tectonics; earthquakes and volcanoes.

Unit-3: Landforms (Periods 18)

Rocks: major types of rocks and their characteristics;
Landforms and their evolution
Geomorphic processes-weathering, mass wasting, erosion and deposition; soil-formation

Unit 4: Climate **(Periods 30)**

- Atmosphere- composition and structure; elements of weather and climate;
- Insolation-angle of incidence and distribution; heat budget of the earth-heating and cooling of atmosphere (conduction, convection, terrestrial radiation and advection); temperature-factors controlling temperature; distribution of temperature-horizontal and vertical; inversion of temperature;
- Pressure-pressure belts; winds-planetary, seasonal and local, air masses and fronts, tropical and extratropical cyclones.
- Precipation-evaporation; condensation-dew, frost, fog, mist and cloud; rainfall-types and world distribution;
- World climates-classification (Koeppen), greenhouse effect, global warming and climatic changes.

Unit 5: Water (Oceans) (Periods 8)

- Hydrological Cycle;
- Oceans - distribution of temperature and salinity; movements of ocean water-waves, tides and currents; submarine reliefs.

Unit 6: Life on the Earth (Periods 6)

- Biosphere - importance of plants and other organisms; biodiversity and conservation; ecosystems and ecological balance.

Unit 7: Map work on identification of features based on the above units on the outline political map of the world.

Part B. India - Physical Environment 65 Periods

Unit 8: Introduction (Periods 3)

- Location-space relations and India's place in the world. (Periods 3)

Unit 9: Physiography (Periods 24)

- Structure and Relief;
- Drainage systems: concept of watershed; the Himalayan and the Peninsular;
- Physiographic divisions.

Unit 10: Climate, Vegetation and Soil (24 Periods)

- Weather and climate — spatial and temporal distribution of temperature, pressure winds and rainfall, Indian monsoon: mechanism, onset and withdrawal, variability of rainfalls : spatial and temporal; Climatic types (koeppen)

- Natural vegetation-forest types and distribution; wild life; conservation; biosphere reserves;
- Soils - major types (ICAR's classification) and their distribution, soil degradation and conservation.

Unit 11: Natural Hazards and Disasters: Causes, Consequences and Management (One case study to be introduced for each topic) (Periods 16)

- Floods and droughts
- Earthquakes and Tsunami
- Cyclones
- Landslides

Unit 12: Map Work of features based on above units on the Outline Political map of India, locating and labelling

C. Practical Work (40 Periods)

Unit 1: Fundamentals of Maps (12 Periods)

- Maps -types; scales-types; construction of simple linear scale, measuring distance; finding direction and use of symbols.
- Latitude, longitude and time;
- Map projection- typology, construction and properties of projections : Conical with one standard parallel and Mercator's projection.

Unit 2: Topographic and Weather Maps (28 Periods)

- Study of topographic maps (1 : 50,000 or 1 : 25,000 Survey of India maps); contour cross section and identification of landforms-slopes, hills, valleys, waterfall, cliffs; distribution of settlements;
- Aerial Photographs: Types & Geometry-vertical aerial photographs; difference between maps & aerial photographs; photo scale determination;
- Satellite imageries, stages in remote sensing data-acquisition, platform & sensors and data products, (photographic & digital).
- Identification of physical & cultural features from aerial photographs & satellite imageries.
- Use of weather instruments: thermometer, wet and dry-bulb thermometer, barometer, wind vane, raingauge:
- Use of weather charts: describing pressure, wind and rainfall distribution.

Unit 3: Practical Record Book and Vivavoce'.

Class XII

One Theory Paper	3 Hours	70 Marks
A. Fundamentals of Human Geography		**35 Marks**
Unit 1: Human Geography		3
Unit 2: People		5
Unit 3: Human Activities		10
Unit 4: Transport, communication & Trade		10
Unit 5: Human settlements		5
Unit 6: Map Work		2
B. India: People and Economy		**35 Marks**
Unit 7: People		5
Unit 8: Human Settlements		4
Unit 9: Resources and Development		12
Unit 10: Transport, Communication and International Trade		7
Unit 11: Geographical Perspective on selected issues and problems		4
Unit 12: Map Work		3
C. Practical Work		**30 Marks**
Unit 1: Processing of Data and Thematic Mapping		15
Unit 2: Field study or Spatial Information Technology		10
Unit 3: Practical Record Book and Viva Voce		5

CLASS XII

A. Fundamentals of Human Geography (70 Periods) 35 Marks

Unit 1: Human Geography: Nature and Scope Periods 3

Unit 2: People Periods 15

- Population — distribution, density and growth
- Population change-spatial patterns and structure; determinants of population change;
- Age-sex ratio; rural-urban composition;
- Human development - concept; selected indicators, international comparisons

Unit 3: Human Activities — Periods 25

- Primary activities - concept and changing trends; gathering, pastoral, mining, subsistence agriculture, modern agriculture; people engaged in agricultural and allied activities - some examples from selected countries;
- Secondary activities-concept; manufacturing: agro-processing, household, small scale, large scale; people engaged in secondary activities - some examples from selected countries;
- Tertiary activities-concept; trade, transport and communication; services; people engaged in tertiary activities - some examples from selected countries
- Quaternary activities-concept; knowledge based industries; people engaged in quaternary activities - some examples from selected countries

Unit 4: Transport, Communication and Trade — Periods 19

- Land transport - roads, railways; trans-continental railways;
- Water transport- inland waterways; major ocean routes;
- Air Transport- Intercontinental air routes;
- Oil and gas pipelines;
- Satellite communication and cyber space
- International trade-Bases and changing patterns; ports as gateways of international trade, role of WTO in International trade.

Unit 5: Human Settlements — Periods 8

- Settlement types - rural and urban; morphology of cities (case study); distribution of mega cities; problems of human settlements in developing countries.

Unit 6: Map Work on identification of features based on above units on the outline Political map of World.

Part B. India: People and Economy — 70 Periods

Unit 7: People — Periods 12

- Population : distribution, density and growth; composition of population - linguistic; sex, rural-urban and occupational change through time-regional variations;
- Migration: international, national-causes and consequences;
- Human development: selected indicators and regional patterns;
- Population, environment and development.

Unit 8: Human Settlements Periods 8

- Rural settlements - types and distribution;
- Urban settlements - types, distribution and functional classification.

Unit 9: Resources and Development Periods 28

- Land resources- general land use; agricultural land use, Distribution of major crops (Wheat, Rice, Tea, Coffee, Cotton, Jute, Sugar cane and Rubber), agricultural development and problems.
- Water resources-availability and utilization-irrigation, domestic, industrial and other uses; scarcity of water and conservation methods-rain water harvesting and watershed management (one case study related with participatory watershed management to be introduced).
- Mineral and energy resources distribution of metallic (Ironore, Copper, Bauxite, Manganese) non-metallic (Mica, Salt) minerals; conventional (Coal, Petroleum, Natural gas and Hydro electricity) and non-conventional energy sources (solar, wind, biogas).
- Industries - types, industrial location and clustering; distribution and changing pattern of selected industries-iron and steel, cotton textiles, sugar, petrochemicals, and knowledge based industries; impact of liberalization, privatisation and globalisation on industrial location;
- Planning in India- target area planning (case study); idea of sustainable development (case study)

Unit 10: Transport, Communication and International Trade Periods 12

- Transport and communication-roads, railways, waterways and airways: oil and gas pipelines; national electric grids; communication networkings - radio, television, satellite and internet;
- International trade- changing pattern of India's foreign trade; sea ports and their hinterland and airports,

Unit 11: Geographical Perspective on Selected Issues and Problems (One case study to be introduced for each topic) Periods 10

- Environmental pollution; urban-waste disposal.
- Urbanisation-rural-urban migration; problem of slum.
- Land Degradation.

Unit 12: Map work on locating and labelling of features based on above units on outline political map of India 3 Marks

C. Practical Work

Unit I : Processing of Data and Thematic Mapping (Periods 20)

- Sources of data.
- Tabulating and processing of data; calculation of averages, measures of central tendency, deviation and rank correlation;
- Representation of data- construction of diagrams: bars, circles and flowchart; thermatic maps; construction of dot; choropleth and isopleth maps.
- Use of computers in data processing and mapping.

Unit II: Field Study or Spatial Information Technology (Periods 10)

Field visit and study: map orientation, observation and preparation of sketch; survey on any one of the local concerns; pollution, ground water changes, land use and land-use changes, poverty, energy issues, soil degradation, impact of floods and drought, catchment area of school, Market survey and Household survey (any one topic of local concern may be taken up for the study; observation and questionnaire survey may be adopted for the data collection; collected data may be tabulated and analysed with diagrams and maps):

OR

Spatial Information Technology

Introduction to GIS; hardware requirements and software modules; data formats; raster and vector data, data input, editing & topology building; data analysis; overlay & buffer.

24. Psychology (Code No. 037)

Psychology is introduced as an elective subject at the higher secondary stage of school education. As a discipline, psychology specializes in the study of experiences, behaviours and mental processes of human beings within a socio-cultural and socio- historical context. This course purports to introduce the learners to the basic ideas, principles and methods in psychology so as to enable them to understand themselves and their social world better. The emphasis is put on creating interest and exposure needed by learners to develop their own knowledge base and understanding.

The course deals with psychological knowledge and practices which are contextually rooted. It emphasizes the complexity of behavioural processes and discourages simplistic cause-effect thinking. This is pursued by encouraging critical reasoning, allowing students to appreciate the role of cultural factors in behaviour, and illustrating how biology and experience shape behaviour. The course while developing an appreciation of subjectivity, also focuses on multiplicity of worldviews.

It is suggested that the teaching - learning processes should involve students in evolving their own understanding. Therefore, Teaching of psychology should be based on the use of case studies, narratives, experiential exercises, analysis of common everyday experiences, etc.

The present effort at reforming and updating the syllabus is based on the feedback received from the teachers and students as well as some new educational and curricular concerns such as, the curriculum load, interdisciplinary approach, issues related to gender parity, concerns of special and marginalised groups, peace and environmental concerns, and inculcating citizenship values.

Objectives

1. To develop appreciation about human behaviour .and human mind in the context of learners' immediate society and environment.
2. To develop in learners an appreciation of multidisciplinary nature of psychological knowledge and its application in various aspects of life.
3. To enable learners to become perceptive, socially aware and self -reflective.
4. To facilitate students' quest for personal growth and effectiveness, and to enable them to become responsive and responsible citizens.

Class XI (Theory)

One Theory Paper **3 Hours**
Unitwise weightage **Marks : 70**

Units		Marks
Foundations of Psychology		
I.	Introduction to Psychology	08
II.	Methods of Psychology	09
III.	The Bases of Human Behaviour	08
IV.	Human Development	07
V.	Sensory and Perceptual Processes	08
VI.	Learning	08
VII.	Human Memory	08
VIII	Language and thought	07
IX.	Motivation and Emotion	07
Practicals (Projects, experiments, small studies)		30

Foundations of Psychology **(90 Periods)**

Unit I: Introduction to Psychology ? 08 Marks (16 Periods)

The unit seeks to help understanding and appreciating psychology as a discipline, its applications and relationships with other sciences through appropriate and interesting examples and analysis of everyday experiences.

Nature of psychology; Basic concepts: Person, Consciousness, Behaviour and Experience: Similarities and variations in psychological attributes; Evolution of the discipline of psychology; Developments in psychology in India; Psychology and other disciplines; Linkages across psychological processes.

Unit II: Methods of Psychology 09 Marks (20 Periods)

The objective of this unit is to familiarize with the methods of studying and understanding psychological questions and issues.

Goals of psychological enquiry; Some important methods: Observation, Naturalistic, Experimental; Correlational study; Interview, Case study; Psychological tools: Tests, Questionnaires and gadgets; Analysis of data: Concepts and computation of the Measures of Central Tendency: Graphical Presentation of Data: Bar, Histogram, Polygon; Ethical issues in the study of psychological processes.

Unit III: The Bases of Human Behaviour 08 Marks (20 Periods)

This unit focuses as on the role of biological and socio-cultural factors in the shaping of human behaviour and experience.

Evolutionary perspective on human behaviour; Biological and cultural roots; Nervous system and endocrine system: Structure and relationship of with behaviour and experience; Brain and behaviour, Role of Neurotransmiters in behavour. Sleep and weakfulness. Genetic bases of behaviour; Culture and human behaviour: Socialization, Enculturation and Acculturation; Globalization; Diversity and pluralism in the Indian context.

Unit IV: Human Development 07 Marks (16 Periods)

This unit deals with variations in development and the developmental tasks across the life span.

Meaning of development; Factors influencing development; Contexts of development; Overview of developmental stages: Prenatal development, Infancy, Childhood, Adolescence (particularly issues of identity, health, social participation), Adulthood and Old age.

Unit V: Sensory and Perceptual Processes 8 Marks (20 Periods)

This unit aims at understanding how various sensory stimuli are received, attended to and given meaning.

Knowing the world; Nature of stimuli; Nature and functioning of sense modalities; Sensory Adaptation; Attention : Nature and determinants; Selective and sustained attention; Principles of perceptual organization; Role of perceiver characteristics in perception; Pattern recognition; Perceptual phenomena : After images; Space Perception, Perceptual constancy, Illusions, Person perception; Socio-cultural influences on perception.

Unit VI : Learning 8 Marks (20 Periods)

This unit focuses on how one beings acquire new behaviour and how changes in behaviour take place.

Nature of learning and learning curve: Paradigms of learnigs: Classical and Operant Conditioning, Observational Learning, Cognitive learning, Verbal learning, Concept learning, skill-learning Factors facilitating learning; Transfer of learning: Types and Applications, Learning styles: Learning disabilities; Some Applications of learning principles.

Unit VII : Human Memory 8 Marks (20 Periods)

This unit deals with how information is received, stored, retrieved and lost. It will also discuss how memory can be improved.

Nature of memory; Information Processing Approach; Levels of processing; Memory systems - Sensory memory, Short-term memory, Long -term memory; Knowledge representation and organisation in memory; Memory as a constructive process; Nature and causes of forgetting; Enhancing memory; Pathologies related to memory.

Unit VIII : Language and Thought 07 Marks (20Periods)

This unit deals with thinking and related processes like reasoning, problem-solving, decision making and creative thinking and relationship between thought and language.

Thought and language: Nature and interrrelationship; Stages of cognitive development: Introduction to the ideas of Piaget, Vygotsky, and Information Processing Approach; Development of language and language use; Reasoning: Problem-solving; Decision making; Creative thinking: Nature, process and development.

Unit IX: Motivation and Emotion 07 Marks (18 Periods)

This unit focuses on why human beings behave as they do. It also deals with how people experience positive and negative events and respond to them.

Human existence and nature of motivation; Biological needs; Social and psychological motives: Achivement, Affiliation and Power, Maslow's hierarchy of needs; Emerging concepts: Competence, Self efficacy and Intrinsic Motivation: Nature of emotions; Physiological, cognitive and cultural bases of emotions; Expression of emotions; Positive emotions; Happiness, Optimism, Empathy and Gratitude; Development of positive emotions; Managing negative emotions such as anger and fear.

Practicals (Projects, experiments, small studies, etc.)30 Marks(60 Periods)

The students shall be required to undertake one project and conduct three practicals. The project. would involve the use of different methods of enqtiry and related skills. Practicals would involve conducting experiments and undertaking small studies, exercises, related to the topics covered in the course (e.g. Human development, Learning, Memory, Motivation, Perception, Attention and Thinking).

(i)	Reporting file including Project work;	05 Marks
(ii)	Viva Voce :	05 Marks
(iii)	Two experiments : 10 marks each (05 for conduct and 05 for reporting)	

Class XII (Theory)

One Theory Paper
Unitwise weightage **Marks 70**

Units		Marks
Psychology, Self and Society		
I.	Intelligence and Aptitude	09
II.	Self and Personality	10
III.	Human Strengths and Meeting the Life Challenges	07
IV.	Psychological Disorders	10
V.	Therapeutic Approaches	07

VI.	Attitude and Social Cognition	08
VII.	Social Influence and Group Processes	07
VIII.	Environmental and Social concerns	06
IX.	Professional Skills for Psychologists	06
	Practicals (Psychological testing, Case Profile etc.)	30

Psychology, Self and Society

Unit I : Intelligence and Aptitude 09 Marks (20 Periods)

The unit aims at studying how people differ with respect to intelligence and aptitude.

Individual differences in intelligence: Theories of Intelligence; Culture and Intelligence; Emotional intelligence; Aptitude: Nature and types: Assessment of psychological attributes.

Unit II : Self and Personality 10 Marks (24 Periods)

This unit focuses on the study of self and personality in the context of different approaches in an effort to appraise the person. The assessment of personality will also be discussed.

Aspects of self: self concept: Self-esteem and Self-regulation; Culture and self; Personality: Concept; Approaches to Personality: Type and Trait, Psychodynamic, Humanistic, Behavioural and Cultural; Assessment of Personality: Self-report Measures, Behavioural Analysis, and Projective Measures.

Unit III : Human Strengths and Meeting Life Challenges07 Marks(14 Periods)

This unit deals with the nature of stress and how responses to stress depend on and individual's appraisal of stressors. Strategies to cope with stress will also be dealt with.

Life challenge and adjsutment; Concept of adaptation; Human strengths and virtues: Nature, types and effects on psychological functioning; Coping with stress; Concepts of health and well-being; Life style, health and well-being.

Unit IV: Psychological Disorders 10 Marks (24 Periods)

This unit discusses the concepts of normality and abnormality and the major psychological disorders.

Concepts of abnormality and psychological disorder, Casual factors, associated with abnormal behaviour, Classification of disorder, Major psychological disorders: Anxiety, Somato-form Dissociative, Mood, Schizophrenic, Developmental and Behavioural Substance Related.

Unit V : Therapeutic Approaches 07 Marks (20 Periods)

This unit discuses the goals, techniques and effectiveness of different approaches to treat psychological disorders.

Nature and process of therapy; Nature of therapeutic relationship; Types of therapies: Psycho-dynamic, Humanistic, Cognitive, Behaviour; Alternative therapies: Yoga, Meditation; Zen; Rehabilitation of mentally ill people.

Unit VI : Attitude and Social Cognition 08 Marks (20 Periods)

This unit focuses on the formation and change of attitudes, cultural influences on attributional tendencies and conditions influencing pro-social behaviour.

Explaining behaviour through attributions; Social cognition; Schemas and stereotypes; Impression formation; Nature and components of attitudes; Attitude formation and change; Behaviour in the presence of others: Pro-social Behaviour; Prejudice and discrimination; Strategies for handling prejudice.

Unit VII : Social Influence and Group Processes 07 Marks (22 Periods)

The unit deals with the concept of group, its functions and the dynamics of social influence process like conformity, obedience and complaince. Different conflict resolution strategies will also be discussed.

Influence Processess: Nature of Conformity, Obedience, and Complaince: Cooperation and Competition; Groups: Nature, formation and types; Influence of group on individual behaviour; Social identity; Inter-Group Conflict; Conflict Resolution Strategies.

Unit VIII: Environmental and Social Concerns 06 Marks (18 Periods)

This unit focuses on the application of psychological understanding to some important social issues.

Human- environment relationship; Environmental effects on human behaviour: .Noise, pollution, crowding, natural disasters, social issue: Aggression and Violence; Social Inequality and Poverty; Media and human values; Promoting pro-environmental behaviour, Human rights and citizenship; Peace.

Unit IX: Professional Skills for a Psychologist 06 Marks (18 Periods)

This unit deals with some effective psychological and interpersonal skills for facilitating personal-social development.

Psychological skills; Observation, Interviewing, Testing, Counseling and Communication.

Psychological testing Practicals 30 Marks (60 Periods)

The students shall be required to prepare one case profile and conduct 5 practicals related to the topics covered in the course. The case profile will include developmental history of the subject, using both qualitative (observation, interview) and quantitative (Psychological testing) approaches. Practicals would involve using standardised psychological assessment devices in different domains (e.g. intelligence, personality, aptitude, adjustment, attitude, self-concept, and anxiety).

Distribution of Marks:

(i) Reporting file including case profile: 05 Marks

(ii) Viva Voce : 05 Marks

(iii) Two practicals 10 marks each (5 for accurrate conduct and 5 for reporting).

25. Sociology (Code No 039)

Rationale

Sociology is introduced as an elective subject at the higher secondary stage. The syllabus is designed to help learners to reflect on what they hear and see in the course of everyday life and develop a constructive attitude towards society in change; to equip a learner with concepts and theoretical skills for the purpose. The curriculum of Sociology at this stage should enable the learner to understand dynamics of human behaviour in all its complexities and manifestations. The learners of today need answers and explanations to satisfy the questions that arise in their minds while trying to understand social world. Therefore, there is a need to develop an analytical approach towards the social structure so that they can meaningfully participate in the process of social change. There is scope in the syllabus not only for interactive learning, based on exercises and project work but also for teachers and students to jointly innovate new ways of learning.

- Sociology studies society. The child's familiarity with the society in which she /he lives in makes the study of sociology a double edged experience. At one level sociology studies institutions such as family and kinship, class, caste and tribe religion and region- contexts with which children are familiar of, even if differentially. For India is a society which is varied both horizontally and vertically. The effort in the books will be to grapple overtly with this both as a source of strength and as a site for interrogation.
- Significantly the intellectual legacy of sociology equips the discipline with a plural perspective that overtly engages with the need for defamiliarization, to unlearn and question the given. This interrogative and critical character of sociology also makes it possible to understand both other cultures as well as relearn about one's own culture.
- This plural perspective makes for an inbuilt richness and openness that not too many other disciplines in practice share. From its very inception sociology has had mutually enriching and contesting traditions of an interpretative method that openly takes into account 'subjectivity' and causal explanations that pays due importance to establishing causal correspondences with considerable sophistication. Not surprisingly its field work tradition also entails large scale survey methods as well as a rich ethnographic tradition. Indeed Indian sociology, in particular has bridged this distinction between what has often been seen as distinct approaches of sociology and social anthropology. The syllabus provides ample opportunity to make the child familiar with the excitement of field work as well as its theoretical significance for the very discipline of sociology.
- The plural legacy of sociology also enables a bird's eye view and a worm's eye view of the society the child lives in. This is particularly true today when the local is inextricably defined and shaped by macro global processes.

- The syllabus proceeds with the assumption that gender as an organizing principle of society cannot be treated as an add on topic but is fundamental to the manner that all chapters shall be dealt with.
- The chapters shall seek for a child centric approach that makes it possible to connect the lived reality of children with social structures and social processes that sociology studies.
- A conscious effort will be made to build into the chapters a scope for exploration of society that makes learning a process of discovery. A way towards this is to deal with sociological concepts not as givens but a product of societal actions humanly constructed and therefore open to questioning.

Objectives

1. To enable learners to relate classroom teaching to their outside environment.
2. To introduce them to the basic concepts of sociology that would enable them to observe and interpret social life.
3. To be aware of the complexity of social processes.
4. To appreciate diversity in society in India and the world at large.
5. To build the capacity of students to understand and analyze the changes in contemporary Indian society.

Class XI

One Paper **3 Hours**

Unitwise Weightage **Marks: 100**

Units		Marks
Introducing Sociology		
I.	Society, Sociology and relationship with other social sciences	10
II.	Basic Concepts	10
III.	Social Institutions	10
IV.	Culture and Society	10
V.	Practical Sociology : Methods & Techniques	10
Understanding Society		
VI.	Sturcture, Process and Stretification	10
VII.	Social Change	10
VIII.	Environment and Society	10
IX.	Western Social Thinkers	10
X.	India Sociologists	10

INTRODUCING SOCIOLOGY **Marks**

UNIT I: SOCIETY & SOCIOLOGY (Periods 22)

- Introducing Society: Individuals and collectivities. Plural Perspectives 10 Marks
- Introducing Sociology: Emergence. Nature & Scope. Relationship to other disciplines

UNIT II: BASIC CONCEPTS (Periods 22)

- Social Groups 10 Marks
- Status and Role
- Social Stratification
- Social Control

UNIT III: SOCIAL INSTITUTIONS (Periods 24)

- Family and Kinship 10 Marks
- Political and Economic Institutions
- Religion as a Social Institution
- Education as a Social Institution

UNIT IV: CULTURE AND SOCIETY (Periods 20)

- Culture. Values and Norms: Shared. Plural. Contested 10 Marks
- Socialization: Conformity. Conflict and the Shaping of Personality

UNIT V: PRACTICAL SOCIOLOGY: METHODS & TECHNIQUES (Periods 22)

- Tools and Techniques: Observation. Survey. Interview 10 Marks
- The Significance of Field Work in Sociology

UNDERSTANDING SOCIETY

UNIT VI: STRUCTURE, PROCESS AND STRATIFICATION (Periods 22)

- Social Structure 10 Marks
- Social Processes: Cooperation, Competition, Conflict
- Social Stratification: Class, Caste, Race, Gender.

UNIT VII: SOCIAL CHANGE (Periods 22)

- Social Change: Types and Dimensions; Causes and Consequences. 10 Marks
- Social Order: Domination, Authority & Law; Contestation, Crime & Violence
- Village, Town & City: Changes in Rural & Urban Society

UNIT VIII: ENVIRONMENT AND SOCIETY (Periods 18)

- Ecology and Society 10 Marks
- Environmental Crises and Social Responses

UNIT IX: WESTERN SOCIAL THINKERS (Periods 24)

- Karl Marx on Class Conflict 10 Marks
- Emile Durkheim on Division of Labour
- Max Weber on Bureaucracy

UNIT X: INDIAN SOCIOLOGISTS (Periods 24)

- G.S. Ghurye on Race and Caste 10 Marks
- D.P. Mukerji on Tradition and Change
- A.R. Desai on the State
- M.N. Srinivas on the Village

Class XII

One Paper **3 Hours** **Marks 100**

Unitwise Weightage

	Units	Marks
	Indian Society	
I.	Structure of Indian Society	8
II.	Social Institutions: Continuity & Change	10
III.	Social Inequality & Exclusion	10
IV.	The Challenges of Unity in Diversity	10
V.	Project work	20
	Change and Development in India	
VI.	Process of Social Change in India	8
VII.	Social Change and the Polity	8
VIII.	Social Change & The Economy	10
IX.	New Areas of Social Change	8
X.	Social Movements	8

INDIAN SOCIETY **Marks 58**

UNIT I: STRUCTURE OF INDIAN SOCIETY (Periods 20)

- Introducing Indian Society: Colonialism, Nationalism, Class and Community 8 Marks
- Demographic structure
- Rural-Urban Linkages and Divisions

UNIT II: SOCIAL INSTITUTIONS: CONTINUITY & CHANGE (Periods 24)

- Family and Kinship 10 Marks
- The Caste System
- Tribal Society
- The Market as a Social Institution

UNIT III: SOCIAL INEQUALITY & EXCLUSION (Periods 24)

- Caste Prejudice, Scheduled Castes and Other Backward Classes 10 Marks
- Marginalization of Tribal Communities
- The Struggle for Women's Equality
- The Protection of Religious Minorities
- Caring for the Differently Abled

UNIT IV: THE CHALLENGES OF UNITY IN DIVERSITY (Periods 12)

- Problems of Communalism, Regionalism, Casteism & Patriarchy 10 Marks
- Role of the State in a Plural and Unequal Society
- What We Share

UNIT V: PROJECT WORK 20 Marks (Periods 18)

CHANGE AND DEVELOPMENT IN INDIA **Marks 42**

UNIT VI: PROCESS OF SOCIAL CHANGE IN INDIA 8 Marks (Periods 22)

- Process of Structural Change: Colonialism. Industrialization, Urbanization
- Process of Cultural Change: Modernization, Westernization, Sanskritisation, Secularization .
- Social Reform Movements & Laws

UNIT VII: SOCIAL CHANGE AND THE POLITY 8 Marks (Periods 22)

- The Constitution as an instrument of Social Change
- Parties, Pressure Groups and Democratic Politics
- Panchayati Raj and the Challenges of Social Transformation

UNIT VIII: SOCIAL CHANGE & THE ECONOMY 10 Marks (Periods 24)

- Land Reforms, the Green Revolution and Agrarian Society
- From Planned Industrialization to Liberalization
- Changes in the Class Structure

UNIT IX: NEW AREAS OF SOCIAL CHANGE 8 Marks (Periods 22)

- Media and Social Change
- Globalization and Social Change

UNIT X: SOCIAL MOVEMENTS 8 Marks (Periods)

- Class-Based Movements: Workers, Peasants.
- Caste-Based Movements: Dalit Movement, Backward Castes, Trends in Upper Caste Responses.
- Women's Movements in Independent India.
- Tribal Movements.
- Environmental Movements.

26. Philosophy (Code No. 040)

OBJECTIVES

Philosophy, a theoretical enterprise with practical applications, aims at understanding the nature and meaning of life and Reality. It is considered to be the mother of all branches of knowledge. The nature of Philosophy is that in it no answer is left unquestioned. It attempts to understand and explain the fundamental axioms and presuppositions which are taken for granted by all branches of knowledge. The +2 syllabus is designed to give the students a glimpse of the nature of problems and the way they are dealt with in its various branches-Logic, Ethics, Classical Indian Philosophy and Western Philosophy.

CLASS XI (THEORY)

One Theory Paper **Time: 3 Hours** **100 Marks**

Unitwise Weightage

Units		Marks
Scientific Method		
1.	Methods of Natural and Social Sciences	10
2.	Observation and Experiment	10
3.	Science and Hypothesis	10
4.	Mill's Methods of Experimental Inquiry	10
5.	Nyaya Theory of Knowledge (General Survey)10	
Logic		
6.	The nature and subject matter of logic	06
7.	Terms & Propositions	15
	Relation between Propositions	
8.	Categorical Syllogism	10
9.	Elements of Symbolic Logic	06
10.	Buddhist Formal Logic	13

Unit 1 : **Methods of Natural and Social Sciences** **20 Pds.**

Value of Science, Nature and aim of Scientific Methods: Difference between Scientific induction, and Induction by simple enumeration. Difference between methods of Natural Sciences and Social Sciences.

Unit 2 : **Observation and Experiment** **20 Pds.**

Their Differences; fallacies of observation.

Unit 3 : **Science and Hypothesis** **25 Pds.**

The place of hypothesis in scientific methods. Formulation of relevant hypothesis. Formal conditions of valid hypothesis. Hypothesis and crucial experiments.

Unit 4 : **Mill's methods of Experimental Inquiry** **25 Pds.**

The method of agreement;

The method of difference;

The joint method of agreement and difference;

The method of concomitant variation;

The method of residue

Unit 5 : **Nyaya Theory of Knowledge** **30 Pds.**

General Survey – Prama, Pramana, Pramanya, Pratyaksa, Anumana, Upamana Sabda

LOGIC

Unit 6: **The nature and scope of logic** **14 Pds.**

What is Logic? Use and application of Logic. Difference between Truth and Validity

Unit 7 : **Terms and Propositions** **30 Pds**

Definition of Term; Denotation and Connotation of Terms. Definitions of Proposition and traditional classification of Propositions. Distribution of Terms.

Relation between Propositions **12 Pds.**

Traditional Square of Propositions

Unit 8: **Categorical Syllogism** **24 Pds.**

Its definition: Rules of valid syllogism and Fallacies.

Unit 9 : **Elements of Symbolic Logic** **14 Pds.**

Value of using symbols in Logic
Basic Truth-tables.

Unit 10 : Buddhist Formal Logic **26 Pds.**

Suggested reference:

1. Bhola Nath Roy	Text-book of Inductive Logic
2. -do-	Text-book of Deductive Logic
3. I.M. Copi	Introduction to Logic.
4. S.C. Chatterjee	Nyaya Theory of Knowledge.
5. S.R. Bhatt and Anu Melhotra	Buddhist Epistemology
6. Chatterjee and Dutta	Indian Philosophy

CLASS XII (THEORY)

One Theory Paper **Time: 3 Hours** **100 Marks**

Unitwise Weightage

Units	Marks
A. INDIAN PHILOSOPHY	**50**
1. Nature and Schools of Indian Philosophy; some basic issues	10
2. Philosophy of the Bhagvad Gita; Karma Yoga	10
3. Buddhism, Jainism	10
4. Nyaya, Vaisesika and Samkhya- Yoga	10
5. Advaita Vedanta	10
B. WESTERN PHILOSOPHY	**50**
6. Knowledge and truth	10
7. The causal Principle.	10
8. Nature of Reality	10
9. Realism and Idealism	10
C. Applied Philosophy	
10. Environmental Ethics, Professional Ethics and Philosophy of Education	10

A. INDIAN PHILOSOPHY -

Unit 1: Nature and Schools of Indian Philosophy; some basic issues
Rta, Karma, Four Purusarthas : Dharma, Artha, Kama, Moksa **24 Pds,**

Unit2: Philosophy of the Bhagavad Gita; Karma Yoga (Anasakta Karma), Svadharama, Lokasamgraha **24 Pds.**

Unit 3 : Buddhism, Jainism **24 Pds.**

Four noble truths and eight-fold path; Theory of dependent origination. Anekantavada and syadvada.

Unit 4 : **Nyaya - Vaisesika and Samkhya – Yoga** **24 Pds**

Nyaya theory of Pramanas. Yoga- The Eight-fold Practice. Samkhya Theory of Three Gumas Vaisesika Theory of Padarthas '.

Unit 5: **Advaita Vedanta** **24 Pds.**

The nature of Atman, Brahman and the world.

B. **WESTERN PHILOSOPHY**

Unit 6 : Knowledge and truth
Rationalism, Empiricism and Kant's Critical Philosophy

Unit 7 : **The Causal Principle** **24 Pds.**

Nature of Cause
Aristotle's theory of four-fold causation cause-effect relationship: entailment regularity succession.

Unit 8: **Nature of Reality**
Proofs for the existence of God: **24 Pds.**
Ontological, Teleological and Cosmological arguments.

Unit 9 : **Realism and Idealism** **24 Pds.**

Mind-Body Problem

C. **Applied Philosophy**

Unit 10: **Environmental Ethics and Professional Ethics 24 Pds.**
(a) Study of' physical, mental and spiritual environments
(b) Medical and Business Ethics.
(c) Philosophy of Education

Suggested References:

1.	John Patrick	Introduction to Philosophy
2.	John Hospers	Introduction to Philosophical Analysis
3.	D.M. Datta and S.C. Chatterjee	Introduction to Indian Philosophy
4.	M. Hiriyanna	Essentials of Indian Philosophy
5.	A.C. Ewing	Fundamental Questions of Philosophy
6.	H. Titus	Living issues in Philosophy
7.	C.D. Sharma	A Critical Survey of Indian Philosophy
8.	William Lillie	An Introduction to Ethics
9.	S.R. Bhatta and Anu Mehrotra	Buddhists Epistemology, (Greenwood Publishing House, Connecticus, USA)
10.	Shri Aurobindo	On Education, Pondicherry

PHYSICAL EDUCATION
(Code No.048)

It covers the following:

I. Eligibility conditions for admission to the course **II.** Conditions for granting affiliation to the schools for offering Physical Education as an elective subject **III.** Theory syllabus for class XI (Part A & B) **IV.** Theory syllabus for class XII (Part A & B). **V.** Part C – Practical - Distribution of marks for the activity practical syllabus. **VI.** Norms for Physical Fitness Test for admission to Physical Education in class XI & for testing Physical Fitness for Girls of classes XI & XII **VII.** Norms for Physical Fitness Test for admission to Physical Education in class XI & for testing Physical Fitness for Boys of classes XI & XII **VIII.** List of content of syllabus; Work load/teaching components; maximum marks allotment; paper setting and nature of questions setting exams **IX.** Guidelines for evaluation of Physical Education theory paper **X.** Guidelines for Physical Education Teachers.

I. ELIGIBILITY CONDITIONS FOR ADMISSION TO THE COURSE

The following category of students will be permitted to join the course:

(i) Those who have represented the school in the Inter School Sports & Games Competitions in any Game/Sport.
(ii) Those who do not represent the school but are keen to join the course should undergo a physical fitness test and secure a minimum of 40% marks.
(iii) Those granted permission to join the course should be medically fit to follow a prescribed programme of physical education.
(iv) The unit of a class in physical education and health education should not exceed 40 students.
(v) Instructional hours and duration of the period should be strictly as per the norms of the Board.

II. CONDITIONS FOR GRANTING AFFILIATION TO SCHOOLS FOR OFFERING PHYSICAL EDUCATION AS AN ELECTIVE SUBJECT.

Only those schools satisfying the following conditions will be permitted to offer physical education as a course of study at +2 stage as an elective subject:

(i) The school should have adequate open space to accommodate at least 200 M track and play fields for minimum three games/sports.
(ii) The teacher handling the elective programme of physical education should hold a Master Degree in Physical Education.
(iii) The school should provide adequate funds for physical education and health education for

purchase of equipments, books on physical education and also for the maintenance of sports facilities.

III. PHYSICAL EDUCATION

Class XI – Theory **Max.Marks 70**

PART – A

1. CONCEPT OF PHYSICAL EDUCATION

1.1 Meaning and definition of Physical Education, its aim and objectives

1.2 Need and importance of Physical Education

1.3 Misconceptions about Physical Education & its relevance in Inter Disciplinary Context

2. CAREER ASPECTS IN PHYSICAL EDUCATION

2.1 Career Options in Physical Education

2.2 Avenues for Career Preparation

2.3 Motivation & Self Assessment for career choices

3. PHYSIOLOGICAL ASPECTS OF PHYSICAL EDUCATION

3.1 Warming up - General & Specific & its Physiological basis

3.2 Effects of Exercise on Muscular & Digestive systems

3.3 Effects of Exercise on Respiratory & Circulatory systems

4. PSYCHOLOGICAL ASPECTS OF PHYSICAL EDUCATION

4.1 Definition & role of Sports Psychology

4.2 Motivation and Achievements in Sports

4.3 Adolescent Problems & its Management

5. HEALTH CONCEPTS OF PHYSICAL EDUCATION

5.1 Role of Physical Education Programme on Community Health Promotion (Individual, Family & Society)

5.2 Effects of Alcohol, Tobacco and Drugs on Sports Performance

5.3 Obesity, Causes & Preventive Measures and Role of diet on Performance

PHYSICAL EDUCATION
Class XI

PART B

Following sub topics relate to any one Game/Sport of choice of student out of these disciplines: Badminton, Handball, Hockey, Kabaddi, Kho Kho, Skating, Swimming & Taekwondo

UNIT 1

1.1 History of the Game/Sport

1.2 Latest General Rules of the Game/Sport

1.3 Measurement of Play Fields and Specifications of Related Sports Equipments

1.4 Important Tournaments and Venues

1.5 Sports Personalities

UNIT 2

2.1 Fundamental Skills of the Game/Sport

2.2 Specific Exercises of Warm-up and Conditioning

2.3 Related Sports Terminologies

2.4 Sports Awards

2.5 Common Sports Injuries & its Prevention

IV. PHYSICAL EDUCATION

Class XII – Theory **Max.Marks 70**

PART – A

1. PHYSICAL FITNESS & WELLNESS

1.1 Meaning & Importance of Physical Fitness & Wellness

1.2 Components of Physical Fitness & Wellness

1.3 Factors Affecting Physical Fitness & Wellness

1.4 Principles of Physical Fitness Development

1.5 Means of Fitness Development – Aerobic & Anaerobic, Sports, Yoga & Recreational Activities

2. TRAINING METHODS

2.1 Meaning & Concept of Training

2.2 Methods of Training

2.3 Methods of Strength Development – Isometric & Isokinetic Exercises

2.4 Methods of Endurance Development – Continuous Method, Interval Training & Fartlek.

2.5 Methods of Speed Development – Acceleration Run & Pace Races

2.6 Circuit Training

3. SOCIOLOGICAL ASPECTS OF PHYSICAL EDUCATION

3.1 Meaning of Sociology & Sports Sociology

3.2 Games & Sports as Man's Cultural Heritage

3.3 Socialization, Leadership, Value Education through Physical Education Programme & Olympic Movement

4. SPORTS & ENVIRONMENT

4.1 Meaning & Need for Environment in Physical Education Programme

4.2 Essential Elements of Positive Environment

4.3 Role of Individual in Improvement of Environment for Prevention of Sports Related Accidents

5. YOGA

5.1 Meaning & Importance of Yoga

5.2 Yoga as an Indian Heritage

5.3 Elements of Yoga

5.4 Role of Yoga in Sports

PHYSICAL EDUCATION
Class XII

PART B

Following sub topics relate to any one Game/Sport of choice of student out of these disciplines: Athletics, Basketball, Cricket, Football, Judo, Table Tennis, Tennis & Volleyball.

UNIT I

1.1 History of the Game/Sport

1.2 Latest General Rules of the Game/Sport

1.3 Measurement of Play Fields and Specifications of Related Sports Equipments

1.4 Fundamental Skills of the Game/Sport

1.5 Related Sports Terminologies

UNIT 2

2.1 Important Tournaments and Venues

2.2 Sports Personalities

2.3 Sports Awards

2.4 Various Sports Organizations

2.5 First Aid & Rehabilitation of Sports Injuries

V. PART 'C' - PRACTICAL

(For classes XI & XII)

Max.Marks 30

The Activity Practical Syllabus has been divided into three parts & the marks allotted for each part are as follows:

(i)	Physical Fitness Test (Compulsory)	:	10 Marks
(ii)	Skill of chosen Sport/Game	:	15 Marks
(iii)	Viva & Record Book(File)	:	05 Marks

VI. Norms for Physical Fitness Test for admission to Physical Education in class XI, & for testing Physical Fitness for Girls of classes XI & XII

	A		B			C		D		E
Points	60 M (In Sec)	100 M (In Sec)	Long Jump (In M)	Standing Broad Jump (In M)	Vertical Jump (In M)	Modified Bent Knee Push-ups (In no.s)	Bent Knee Sit-ups (In no.s)	Overhead Backward Basketball Throw with both the Hands (In M)	Shot Put 04.00 Kgs (In M)	Shuttle Run 4 x 10 M (In Sec)
10	9.0	14.0	4.0	2.00	28	25	30	12.00	07.50	10.50
9	9.2	14.3	3.7	1.85	26	23	27	11.50	07.00	10.70
8	9.5	14.7	3.4	1.65	23	20	24	10.50	06.50	11.00
7	9.8	15.1	3.1	1.45	20	18	21	09.50	06.00	11.30
6	10.2	15.6	2.8	1.25	17	16	19	08.50	05.50	11.60
5	10.6	16.2	2.5	1.00	15	14	15	07.00	05.00	12.00
4	11.0	17.0	2.2	0.80	13	12	12	06.00	04.50	12.40
3	11.5	17.5	1.9	0.60	10	10	10	05.00	04.00	12.80
2	12.0	18.5	1.6	0.50	08	07	07	04.00	03.50	13.50
1	12.5	19.2	1.3	0.40	06	04	04	03.50	03.00	14.50

- Each student will have to choose five items for test of choice.
- One item for test must be chosen from 'A'; one from 'B'; one from 'C'; one from 'D' and test item number 'E' is compulsory for all.

VII. Norms for Physical Fitness Test for admission to Physical Education in class XI, & for testing Physical Fitness for Boys of classes XI & XII

	A		B			C		D		E
Points	60 M (In Sec)	100 M (In Sec)	Long Jump (In M)	Standing Broad Jump (In M)	Vertical Jump (In M)	Push-ups (In no.s)	Bent Knee Sit-ups (In no.s)	Overhead Backward Basketball Throw with both the Hands (In M)	Shot Put 7.260 Kgs (In M)	Shuttle Run 4 x 10 M (In Sec)
10	07.50	12.00	05.50	02.50	40	40	45	16.00	07.50	09.00
9	07.70	12.30	05.20	02.35	38	38	42	15.50	07.00	09.20
8	08.00	12.70	04.90	02.15	35	35	38	14.50	06.50	09.50
7	08.30	13.10	04.60	01.95	32	32	34	13.50	06.00	09.80
6	08.60	13.60	04.30	01.75	28	29	30	12.50	05.50	10.10
5	08.90	14.20	04.00	01.50	25	25	25	11.50	05.00	10.50
4	09.30	15.00	03.80	01.25	23	21	22	10.50	04.50	11.00
3	09.70	15.50	03.60	01.00	20	17	19	09.50	04.00	11.50
2	10.10	16.50	03.30	0.80	18	14	15	08.50	03.50	12.20
1	10.50	17.50	03.30	0.60	16	10	10	07.50	03.00	13.00

- Each student will have to choose five items for test of choice.
- One item for test must be chosen from 'A'; one from 'B'; one from 'C'; one from 'D' and test item number 'E' is compulsory for all.

VIII. List of Content of Syllabus; Work load/Teaching Components; Maximum Marks Allotment; Paper Setting and Nature of Questions Setting for Exam

List of Content of Syllabus	Work load/Teaching Components	Maximum Marks Allotment	Paper Setting	Nature of Questions Setting for Exam
Part 'A'			Two questions of either / or nature should be set out of each Unit. • 14 questions will be set from the total syllabus. • Seven questions compulsory to be attempted by the student. One out of each unit.	• Two Questions of Knowledge content. • Two Questions of Application. • Two Questions of Understanding. • One Question of liberal nature.
Unit I	10 Periods	10		
Unit II	10 Periods	10		
Unit III	10 Periods	10		
Unit IV	10 Periods	10		
Unit V	10 Periods	10		
Part 'B'				
Unit I	10 Periods	10		
Unit II	10 Periods	10		
Practical				
(i)	70 Periods to cover (i) Physical Fitness (ii) Teaching of skills for Games & Sports (iii) Preparation of Record Book/File & Viva	10	Assessment of - (i) Fitness Standards (ii) Proficiency in skill taught (iii) Preparation of Record Book/File & its presentation in Viva	(i) Fitness test against the norms. (ii) Skill test on three criteria A.Optional One out of three choices. B.Compulsory Set by the Examiners. C.Liberal As per the choices of the student. (iii) Comparative assessment among the class.
(ii)		15		
(iii)		05		

IX. GUIDELINES FOR EVALUATION OF PHYSICAL EDUCATION THEORY PAPER

1. Each question will be of 10 marks.
2. The students are expected to attempt one question out of the two options given in each unit.
3. Break up of the 10 marks of each question is as follows:

(i)	Knowledge of content:	3 marks
(ii)	Understanding of the knowledge of content:	3 marks
(iii)	Capability/Examples/Description for application of knowledge & understanding of the concepts:	4 marks

Note: Item No. 3 will be applicable to the long & medium length questions. Long questions shall be between 200 – 250 words and short questions shall be of 80 – 100 words.

4. Very short questions comprises of 5 sub sets of 2 marks each.

Note: Terminologies/ definitions/ concepts shall be described in approximately 30 words. If the description is supported with the source of reference and authors & the situation of application, it may award 2 marks; otherwise marks may be allotted appropriately.

5. Liberal component of long essay/detailed note/suggestive writing shall be of more than 250 words. The break up of the 10 marks for liberal component of question shall be as follows:

(i)	Understanding and knowledge of content:	2 marks
(ii)	Source of reference/author/attention:	1 mark
(iii)	Understanding of application aspects:	3 marks
(iv)	Suggesting writing/critical analysis/futuristic model:	4 marks

X. GUIDELINES FOR PHYSICAL EDUCATION TEACHERS

Teaching of Physical Education is a combination of understanding of Theoretical knowledge to be applied in performing various games & sports. Accordingly for transaction of syllabus, at the level of

classes XI & XII the following consideration as suggested must be applied as guidelines.

I, III, IV, V, and VI & VII must be thoroughly understood and adopted.

VIII provides the Content of Syllabus; Work load/Teaching Components; Maximum Marks Allotment; Paper Setting and Nature of Questions Setting for Exam. It provides guidelines for teachers to cover the syllabus accordingly.

IX provides the guidelines to be followed by the evaluator of the answer books of the candidates. Thereby it is essential for teachers to understand the components of evaluation also.

Each unit of the syllabus shall be taught and students must be provided the knowledge of concept (definitions, explanations etc), understanding in explanation and description, application in various setting of Physical Education, Sports & life.

EXAMPLE: UNIT II
CLASS XI

2. Career aspects in Physical Education.

2.1 Career Options – What are the careers in Physical Education, Traditional & emerging trends. Teaching/Coaching; Health related careers; administration related careers; performance related careers (Officials/Players/Recorders; Reporters/etc); Communication (Journalism, Photography, T V Reporters, Book Publishing, Writing, Industry, Marketing, Selling, Event Management, etc)

2.2 Various degrees and diplomas in various universities for various careers; eligibility; duration of courses; various institutions offering various courses.

2.3 Motivation and self assessment in career choices; factor acting as motivators and criteria to assess the personal choice to opt for sports career.

Community based programme, individual/group survey, interviews & quiz etc in the immediate social settings must be undertaken as part of applying the knowledge and understanding of the various concepts of the various part of syllabus.

As far as possible, support of audiovisual aids; chat; Radio; TV; Projector etc should be used in order to explain the content.

For the practical components of the syllabus, curriculum should be transected through the demonstration, exhibition matches, practical matches, skills in the sports annual festivals, annual sports days etc. The weight-age of learning component may be comparatively assessed on the basis of performance of the candidates.

Internal assessment should be continuous and progressive.

Part-C : **PRACTICAL** 10 Marks

TRACK AND FIELD

1. SPRINTS AND RELAYS

(i) Practice of starts with blocks using proper command.

(ii) Time action period - Reaction time, block clearance time, acceleration time, velocity maintenance time, finish time

Scheme of grading:

(a) 100 m Run

Boys	**Girls**
11.5 Sec. and below = A1	13.7 Sec. to 14.4 Sec. = A1
11.6 Sec. to 12.3 Sec. = A2	14.5 Sec. to 15.2 Sec. = A2
12.4 Sec. to 13.1 Sec. = B1	15.3 Sec. to 16.0 Sec. = B1
13.2 Sec. to 13.9 Sec. = B2	16.1 Sec. to 16.8 Sec. = B2
14.0 Sec. to 14.7 Sec. = C1	16.9 Sec. to 17.7 Sec. = C1
14.8 Sec. to 15.5 Sec. = C2	17.8 Sec. to 18.5 Sec. = C2
15.6 Sec. to '16.3 Sec. = D1	18.6 Sec. to 19.3 Sec. = D1
16.4 Sec. to 17.1 Sec. = D2	19.4 Sec. to 20.1 Sec = D2
17.2 and above = E	20.2 Sec. and above = E

(b) 200 m Run

25.0 Sec. and below = A1	24.0 Sec. and below = A1
25.1 Sec. to 26.0 Sec. = A2	24.1 Sec. to 27.0 Sec. = A2
26.1 Sec. to 27.0 Sec. = B1	27.1 Sec. to 30.0 Sec. = B1
27.1 Sec. to 28.0 sec. = B2	30.1 Sec. to 33.0 Sec. = B2
28.1 Sec. to 29.0 Sec. = C1	33.1 Sec. to 36.0 Sec. = C1
29.1 Sec. to 31.0 Sec. = C2	36.1 Sec. to 39.0 Sec. = C2
30.0 Sec. to 31.0 Sec. = D1	39.1 Sec. to 42.0 Sec. = D1
31.1 Sec. to 32.0 Sec. = D2	42.1 Sec. to 45.0 Sec. = D2
32.1 and above = E	45.1 and above = E

(c) 400 m Run (Boys)	**(Girls)**
56.0 Sec. and below = A1	68.0 Sec. and below = A1
56.1 Sec. to 58.0 Sec. = A2	68.1 Sec. to 71.0 Sec. = A2
58.1 Sec. to 60.0 Sec. = B1	71.1 Sec. to 74.0 Sec. = B1

60.1 Sec. to 62.0 Sec. = B2
62.1 Sec. to 64.0 Sec. = C1
64.1 Sec. to 66.0 Sec. = C2
66.1 Sec. to 68.0 Sec. = D1
68.1 Sec. to 70.0 Sec. = D2
70.1 and above = E

74.1 Sec. to 77.0 Sec. = B2
77.1 Sec. to 80.0 Sec. = C1
80.1 Sec. to 83.0 Sec. = C2
83.1 Sec. to 86.0 Sec. = D1
86.1 Sec. to 89.0 Sec. = D2
89.1 and above = E

2. MIDDLE AND LONG DISTANCE RACES

(i) Practice of standing start using proper command.

(ii) Technique of endurance running

Scheme of Grading

(d) 800 m Run (Boys)

2.10.0 and below = A1
2.10.1 to 2.20.0 = A2
2.20.1 to 2.30.0 = B1
2.30.1 to 2.40.0 = B2
2.40.1 to 2.50.0=C1
2.50.1 to 3.00.0 = C2
3.00.1 to 3.10.0 = D1
3.10.1 to 3.20.0 = D2
3.20.1 and above = E

(Girls)

2.45.0 and below = A1
2.45.1 Sec. to 2.55.0 = A2
2.55.1 Sec. to 3.05.0 = B1
3.05.1 Sec. to 3.15.0 = B2
3.15.1 Sec. to 3.25.0=C2
3.25.1 Sec to 3.35.0 = C2
3.35.1 Sec. to 3.45.0 = D1
3.45.1 Sec. to 3.55.0 = D2
3.55.1 and above = E

(e) 1500 m Runs (Boys only)

4.40.0 and below = A1
4.40.1 to 4.50.0 = A2
4.50.1 to 4.50.0 = B1
5 .00.1 to 5.10.0 = B2
5.10.1 to 5.20.0 = C1
5.21.1 to 5.30.0 = C2
5.31.0 to 5.40.0 = D1
5.40.1 to 5.50.0 = D2
5.50.1 and above = E

(f) 3000 m Runs (For Boys only)

10.30.0 and below = A1
10.30.1 to 10.00.0=A2
11.00.1 to 11.30.0=B1

11.30.1 to 12.00.0 = B2
12.00.1 to 12.30.0 = C1
12.30.1 to 13.00.0 = C2
13.00.1 to 13.30.0 = Dl
13.30.1 to 14.00.0 = D2
14.00.1 and above = E

HURDLES

(i) Swinging leg action
(ii) Trailing leg action
(iii) Position of the body while clearing the hurdle
(iv) Arm action
(v) Developing rhythm from start to first hurdle and in between the hurdles

Scheme of Grading

110 M Hurdles (for Boys)

20.0 Sec. and below = A1
20.1 Sec. to 21.0 Sec. = A2
21.1 Sec. to 22.0 Sec. = B1
22.1 Sec. to 23.0 Sec. = B2
23.1 Sec. to 24.0 Sec. = C1
24.1 Sec. to 25.0 Sec. = C2
25.1 Sec. to 26.0 Sec. = D1
26.1 Sec. to 27.0 Sec. =D2
27.1 and above =E

100 M Hurdles (for Girls)

20.0 Sec. and below = A1
20.1 Sec. to 21.0 Sec. = A2
21.1 Sec. to 22.0 Sec. = B1
22.1 Sec. to 23.0 Sec. = B2
23.1 Sec. to 24.0 Sec. = C1
24.1 Sec. to 25.0 Sec.-= C2
25.1 Sec. to 26.0 Sec. = D1
26.1Sec. to 27.0Sec.=D2
27.1 and above = E

400 m Hurdles (for boys)

65.0 Sec. and below = A1
65.1 Sec. to 68.0 Sec. = A2
68.1 Sec. to 71.0 Sec. = B1
71.1 Sec. to 74.0 Sec. = B2
74.1 Sec. to 77.0 Sec. = C1
77.1 Sec. to 80.0 Sec. = C2
80.1 Sec. to 83.0 Sec. =D1
83.1 Sec. to 86.0 Sec. = D2
86.1 and above = E

BROAD JUMP

- Approach run
- Takeoff
- Flying phase (running in the air style)
- Landing

Scheme of Grading:

Boys	**Girls**
5.50 mts. and above = A1	5.00 mts. and above = A1
5.00 mts to 5.49 mts. = A2	4.50 mts. to 4.99 mts. = A2
j 4.50 mts. to 4.99 mts. = B1	4.00mts. to 4.49 mts. = B1
4.00 mts. to 4.49 mts. = B2	3.50 mts. to 3.99 mts = B2
350 mts- to 399 mts = C1	300 mts. to 3.49 mts. = C1
3.00 mts. to 3.49 mts. = C2	2.50 mts. to 2.99 mts. = C2
2.50 mts. to 2.99 mts. = D1	2.00 mts. to 2.49 mts. = D1
1 2.00 mts. to 2.49 mts. = D2	1.50 mts. to 1.99 mts. = D2
2.00 and below = E	1.49 and below = E

TRIPLE JUMP
(Boys Only)

- Approach run
- Take off
- Performance of hop, step and jump :
- Landing

Scheme of Grading:

12 mts. and above = A1

11.50mts. to 11.99mts. =A2

11.00mts. to 11.49mts. =B1

10.50 mts. to 10.99 mts. = B2

10.00 mts. to 10.49 mts. = C1

9.50 mts. to 9.99 mts. = C2

9.00 mts. to 9.49 mts. = D1

8.50 mts. to 8.99 mts. = D2

8.49 mts. and below = E

High Jump

- Approach run
- Take off
- Flying phase (straddle roll)
- Landing

Scheme of Grading:

Boys	**Girls**
1.79 mts. and above = A1	1.50 mts. and above = A1
1.60 mts. to 1.69 mts. = A2	1.45 mts. to 1.49 mts. = A2
1.50 mts. to 1.59 mts. = B1	1.40 mts. to 1.44 mts. = B1
1.40 mts. to 1.49 mts. = B2	1.30 mts. to 1.39 mts. = B2
1.30 mts. to 1.39 mts. = C1	1.20 mts. to 1.29 mts. = C1
1.20 mts. to 1.29 mts. -= C2	1.10 mts. to 1.19 mts. = C2
1.10 mts. to 1.19 mts. = D1	1.00 mts. to 1.09 mts. = D1
1.00 ms. to 1.09 mts. = D2	0.90 mts. to 0.99 mts. = D2
0.99 mts. and below = E	0.89 mts. and below = E

SHOT PUT

- Stance
- Glide
- Release
- Reverse

Scheme of Grading:

Boys	**Girls**
10 mts. and above = A	8.50 mts. and above = A1
9 mts. to 9.99 mts. = A2	7.50 mts. to 8.49 mts. = A2
8 mts. to 8.99 mts. = B1	6.50 mts. to 7.49 mts. = B1
7 mts. to 7.99 mts. = B2	5.50 mts. to 6.49 mts. = B2
6 mts. to 6.99 mts. = C1	4.50 mts. to 5.49 mts. = C1
5 mts. to 5.99 mts. = C2	3.50 mts. to 4.49 mts. = C2
4 mts. to 4.99 mts. = D1	3.00 mts. to 3.49 mts. = D1
3 mts. to 3.99 mts. = D2	2.50 mts. to 2.99 mts = D2
2.00 mts. and below = E	2.49 mts. and below = E

DISCUS THROW

- Stance
- Preliminary Swings
- Throws with one and one and a half turn J
- Reverse

Scheme of Grading:

Boys	**Girls**
25 mts. and above = Al	20 mts. and above = Al
22 mts. to 24.99 mts. = A2	17 mts. to 19.99 mts. = A2
19 mts. to 21.99 mts. = Bl	14 mts. to 16.99 mts. = B1
16 mts. to 18.99 mts. = B2	11 mts. to 13.99 mts. = B2
13 mts. to 15.99 mts. = C1	8 mts. to 10.99 mts. = Cl
10 mts. to 12.99 mts. = C2	5 mts. to 7.99 mts = C2
7 mts. to 9.99 mts. = D1	4 mts. to 4.99 mts. = D1
4 mts. to 6.99 mts. = D2	3 mts. to 3.99 mts. = D2
3.99 mts. and below = E	2.99 mts. and below = E

JEVELIN THROW

- Grip
- Javelin carry
- Transition from approach to five stride rhythm
- Release
- Reverse

Scheme of Grading:

Boys	**Girls**
35 mts. and above = A1	22 mts. and above = A1
32 mts. to 34.99 mts. = A2	19 mts. to 21.99 mts. = A2
29 mts. to 31.99 mts. = Bl	16 mts. to 18.99 mts. = B1
26 mts. to 28.99 mts. = B2	13 mts. to 15.99 mts. = B2
23 mts. to 25.99 mts. = C1	11 mts. to 12.99 mts. = Cl
20 mts. to 22.99 mts. = C2	9 mts. to 10.99 mts. = C2
17mts. to 19.99 mts = D1	7 mts. to 8.99 mts. = D1
14 mts. to 16.99 mts. = D2	5 mts. to 6.99 mts. = D2
13.99 mts. and below = E	4.99 mts. and below = E

1. BAD MINTON

Skills

1. Strokes

(a) Forehand and Backhand overhead strokes:

(i) Lob

(ii) Toss

(iii) Clear (offensive and defensive)

(iv) Drop

(v) Smash

2. Forehand and Backhand side arm strokes

(a) Drive

3. Forehand and Backhand under arm strokes

(a) Net strokes

4. Forehand and Backhand Cross Court Strokes

5. Tactics and Strategy

(a) Systems bf play

(i) Singles Play

(ii) Doubles pattern of play

- Front and Back
- Side by Side
- Rotation

(iii) Mixed Doubles Game

Scheme of Grading

50% Marks will be awarded on the basis of students performance on objective test and 50% on the basis of rating in actual play and preferably by panel of three professional teachers in physical education.

I. A nine point scale should be used in grading various skills of Badminton.

Different types of services, strokes and ability to receive different types of services and strokes to be graded and scheme to be devised by the teachers themselves.

Note: For service test, zones should be marked on the court.

II. Besides testing in various skills, students should be separately graded in a game situation. The following points should be observed while grading the students.

1. Defence
2. Attack
3. Footwork
4. Positioning
5. Anticipation

BASKETBALL

1. Ball handling - Holding position of fingers, body position, stance of player with ball.

2. Catching the ball - (Receiving) skills involved.

3. Passing skills - (Drills in pairs)

(a) Two handed chestpass

(b) Two handed bounce pass

(c) Two handed underhand pass (right/left side)

(d) Two handed overhead pass

4. Dribbling - Dribbling high with speed, using alternate hands, low dribble

5. Shooting

(a) Two handed set shot

(b) Two handed free throw

(c) Lay up shot following dribble using right hand (over the shoulder)

6. Footwork - **Player stance, position of feet, position of hand, elementary shuffling and sliding movement (drills).**

7. Pivoting-Stationary Pivot.

8. Individual defense - Player stance, position of hands, position of feet, defender's position in between opponent and basket.

9. Team defence - Man to Man defence.

10. Team Offence - Fast break offence

11. Lead up games/relays -

(a) Captain ball

(b) Pin Basket Ball

(c) 5 passes (front court)

(d) Dribbling relay

(e) Dribbling and passing relay

(f) Lay up shooting relays

12. Full court and half court game situations using simple defence-offence taught.

Scheme of Grading

50% Marks will be awarded on the basis of students performance on objective test and 50% on the basis of rating in actual play and preferably by panel of three professional teachers in physical education.

Objective Assessment

	Set Shooting	(10 chances)	
1.	(20' away from ring) (Best of two trials)	One point for each chance converted Note: A student missing all chances will get 1 point	
2.	Pivot shots (stationary) 10 chances from free throw lanes (3 on each side) and one from free throwline (Best of two trials)	One point each chance converted Note: A student not converting any Basket will get 1 point	
		Boys	**Marks to be awarded**
3.	Continuous lay up shooting from	22 seconds and below	10

each side of Basket (left, centre, right) starting from behind center line and finishing the dribble at the starting point (timing/shooting are important).	22.1 to 22.5 sec.	9
	22.6 to 23.0 sec.	8
	23.1 to 23.5 sec.	7
	23.6 to 24.0 sec.	6
	24.1 to 24.5 sec.	5
	24.6 to 25.0 sec.	4
	25.1 to 25.5 sec.	3
	25.6 to 26.0 sec.	2
	26.1 to 26.5 sec.	1
	Girls	
	24 seconds and below	10
	24.1 to 24.5 sec.	9
	24.6 to 25.0 sec.	8
	25.1 to 25.5 sec.	7
	25.6 to 26.0 sec.	6
	26.1 to 26.5 sec.	5
	26.6 to 27.0 sec.	4
	27.1 to 27.5 sec.	3
	27.6 to 28.0 sec.	2
	28.1 to 28.5 sec.	1

Note: Unless basket is converted on one side, the student should not go to shooting at the other side.

4. **Give and Go Lay Up** from centre) — Ten chances (one point for each chance converted

(Best of two Trials)

Note: A student who does not score even one gets I point.

5. Zig-Zag Dribble

(Width of the Floor)

Marks to be awarded

Boys		Girls	
10.5 seconds and below	10	11.0 seconds and below	10
10.6 sec. to 11.0 sec.	9	11.1 sec. to 11.5 sec.	9
11.1 sec. to 11.5 sec.	8	11.6 sec. to 12.0 sec.	8
11.6 sec. to 12.0 sec.	7	12.1 sec. to 12.5 sec.	7
12.1 sec. to 12.6 sec.	6	12.6 sec. to 13.0sec.	6
12.6 sec. to 13.0 sec.	5	13.1 sec. to 13.5 sec.	5
13.1 sec. to 13.5 sec.	4	13.6 sec. to 14.0 sec.	4

13.6.sec. to 14.0 sec.	3	14.1 sec. to 14.5 sec.	3
14.1 sec. to 14.5 sec.	2	14.6 sec. to 15.0 sec.	2
14.6 sec. to 15.0 sec.	1	15.1 sec. to 15.5 sec.	1

Note:

1. From one side line 5 Indian Clubs are arranged at 1.50 metre distance (in between each club) and the player starts dribbling from one side line in zig-zag manner and crosses the other side line to return without breaking the dribble in a zig-zag manner weaving in and around the clubs and finishes at the starting point. Other hand may be used for dribbling.

2. The first Indian club is 4 metres away and the last Indian club is also 4 metres away from the two side lines concerned.

FOOTBALL

Skills:

1. Kicking

(a) Kicking fundamentals

(i) Instep kick

(ii) Kicking with inside of the foot

(iii) Kicking with outside of the foot

(b) Lofted kicks with either foot

(c) Practice of in-swing and out -swing

(d) Practice of Corner kicks - Lobbing - Clip shots, and, penalty kicks with special emphasis according to new amendments.

2. Passing and Inter-passing:

(a) Inter-passing between two players

(b) Inter-passing among three players

(c) Three man weave

(d) Inter-passing among 4 players in different zones

(e) Related practices

3. Tackling

(a) Interception and hasty tackles

(b) Sliding tackles

(c) Relating practices

4. Heading

(a) Related practices of heading and

(b) Lead up drills

5. Dribbling

Practice of dribbling skills suited to functional training

6. Goal keeping

(a) Collecting balls from basic positions, challenged position, advancing and coming out and anticipation of free ball situation and challenged situation

(b) Punching and fisting high balls.

(c) Defending and saving penalty kicks

7. Lead up and minor games

(a) Heading volleyball

(b) Two ball Soccer

(c) Five a side football

8. Games situation and practice for positional play

9. Tactics and Coaching and the Game

General orientation about the importance of strategies in game:

(a) Positional play and elementary tactics of play

(b) Conditioned games and group practice

(c) Starts and restarts

(d) Elements of defence and attack

(e) Two back system and three back system

(f) Principle of zonal defence and man to man defence

(g) W and M. Formation of attack

(h) Defence and attack from free-kicks, penalty-kicks and corner-kicks

(i) Tactics of defence and attack for adverse conditions

Scheme of Grading

50% Marks will be awarded on the basis of students performance on objective test and 50% on the basis of rating in actual play and preferably by panel of three professional teachers in physical education.

2. Stationary ball kicking (Lofted kick) right or left foot (Best foot)

Above 45 mts.	=	A1
40 mts. to 44 mts.	=	A2
35nJts. to 39nJts.	=	B1
30 mts. to 34 mts.	=	B2
25 mts. to 29 mts.	=	C1
20 mts. to 24 mts.	=	C2
15 mts. to 19 mts.	=	D1
10 mts. to 14 mts.	=	D2
And below 10 mts.	=	E

3. **Drop-shot (Half Volley)**

Above 60 mts.	=	A1
50 mts. to 59 mts.	=	A2
40 mts. to 49 mts.	=	B1
30 mts. to 39 mts.	=	B2
20 mts. to 29 mts.	=	C1
15 mts. To 19 mts.	=	C2
10 mts. to 14 mts.	=	D1
4 mts. to 9 mts.	=	D2
below 4 mts.	=	E

4. Trapping - Trapping a falling ball from 20 ft. height, 9 chances - one point for every one successful attempt.

5. Heading for distance

21 mts.	=	A1
18 mts.	=	A2
15 mts.	=	B1
12 mts.	=	B2
9mts.	=	C1
6 mts.	=	C2
3 mts.	=	D1
1 mts.	=	D2
below 1 mts.	=	E

6. Running with the ball (Dribbling) with a controlled ball and shooting running from the center circle and shooting from the penalty area.

   Norms may be worked out according to the means and standard of performance for speed and accuracy and accurate shot in goal.

Highly skillful dribble	=	A1
Accurate and powerful shot	=	A2
Fast and accurate shot	=	B1
Sufficiently fast and accurate shot	=	B2
Slow but accurate shot	=	C1
Very slow but accurate shot	=	C2
Slow but near miss shot	=	D1
Slow and uncontrolled shot	=	D2
Aimless shot	=	E

4. HOCKEY

Skills

I. Straight Hitting Stopping

(a) Reverse hitting and stopping
(b) Hitting on the wrong foot

II. Straight Push and Stopping

(a) Reverse push and stopping
(b) Pushing on the wrong foot

III. Scooping

(a) Push scoop
(b) Shoveling

IV. Flick

(a) Straight Flick
(b) Reverse Flick
(c) Flick on the wrong foot:

V. Dribbling and Carrying the Ball

VI. Passing

(a) Through pass
(b) Return pass
(c) Deflection pass
(d) Interchanging position

VII. Dodging

(a) Dodging to the opponents left
(b) Dodging to the opponents right
(c) Double dodging

VIII. Different Techniques of

(a) Penalty Comer
(b) Comer
(c) Penalty Stroke
(d) Push in
(e) Goal Keeping

IX. Tackling

(a) Lunging
(b) Feinting

X. Positional Play in Attack

XI. Positional Play in Defence

XII. Simple strategies and tactics in attack and defence

XIII. Lead up games, drills, minor games and relays for the improvements of techniques of all the fundamental skills.

Scheme of Grading

50% marks will be awarded on the basis of students performance on objective test and 50% on the basis of rating in actual play and preferably by panel of three professional teachers in Physical Education.

1. Dribbling and Dodging:

5 flags are placed in a line 5 feet from each other. Players dribble the ball zig zag and dodge-in-between the flags to the end of the line and back again 2 chances. .

2. Pushing:

Pushing from a distance of 30 yards for boys and 20 yards for girls. Nine attempts. One point for each successful try. :

3. Hitting for distance:

From goal line towards goal (better of the two trials)

Boys	**Girls**
Distance	Distance
Above 80 mts. == A1	Above 50 mts. == A1
70 to 79 mts. == A2	45 to 49 mts. == A2
60 to 69 mts. == B1	40 to 44 mts. == B1
50 to 59 mts. == B2	35 to 39 mts. == B2
40 to 49 mts. == C1	30 to 34 mts. == C1
30 to 39 mts. == C2	25 to 29 mts. == C2
20 to 29 mts. == D1	20 to 24 mts. == D1
10 to 19 mts. == D2	10 to 19 mts. == D2
10 mts. and below == E	10 mts. and below == E

4. Test for Tackling

Marks will be awarded on the basis of performance.

3. Table Tennis

Skills

1. Service
   - (a) Chopped service
   - (b) Side spin service

2. Strokes

- (a) Defensive strokes:
  - (i) Block return
  - (ii) Balloon return

(iii) Chopping the top spin drives (forehand and backhand)

(iv) Flat return

(b) Attacking strokes:

(i) Stop ball

(ii) Loop top spin ball

(iii) Side spin ball

(iv) Flat hit (forehand and backhand)

(v) Chop attack (forehand and backhand)

3. Receiving:

(a) Receiving side spin service:

(i) Forehand side spin service

(ii) Forehand shoulder level, side spin service

(iii) Backhand side pull service

(b) Receiving different types of strokes:

(i) From all the attacking strokes taught so far

(ii) From all the defensive strokes taught so far

4. Tactics

(a) Mid-distance (All rounders) tactics

(b) Variation tactics -

(c) Anticipation

(d) Playing position

(e) Foot work

Scheme of Grading

50% marks will be awarded on the basis of students performance on objective test and 50% on the basis of rating in actual play situation preferably by panel of three professional teachers in Physical Education.

1. A nine point scale should be used in grading various techniques of Table Tennis. For objective marking more than one person should grade the students.

Different types of services strokes and ability to receive different services and strokes are to be graded as follows:

A1 = 9 points
A2 = 8 points
B1 = 7 points
B2 = 6 points
C1 = 5 points
C2 = 4 points

D1 = 3 points
D2 = 2 points
E = 1 Points and below

2. Besides testing students in various techniques, he should be separately graded in game situation. Gradmg should be done by more than one person. The following points should be observed in grading students.

(a) Defence

(b) Attack

(c) Footwork

(d) Positioning

(e) Anticipation

KHO-KHO

Skills

1. Chasing skills - Trapping, Diving - stationary dive, running dive. Touching at the foot with either hand, Dragging along the cross line and along the post. .
2. Skills in running - Escape from trapping. Avoiding, Trap, Tempting the Chasers to exhaustion.
3. Method of running - Ring play, Front ring, Back ring, Initial and subsequent positioning. Use of various skills changing repeatedly.
4. Lead up games:
   (i) Atya Patya
   (ii) Three Deep
   (iii) Sanjeevani (Giving life or Vish Amrit)

Scheme of Grading:

50% marks will be awarded on the basis of students performance on objective test and 50% on the basis of rating in actual play and preferably by panel of three professional teacher in physical education.

1.	Endurance and Speed Running	9 points
2.	Testing in chasing skills	9 points
3.	Testing in Running skills	9 points
4.	Testing in methods Running	9 points
5.	General playing ability and combination	9 points

Note:

1. In case of items 2, 3 and 4 above, the candidate may be asked to demonstrate any two skills, for each hand specified and marks may be awarded on the basis of accuracy of form and effectiveness of moves.

2. The candidate will be rated in the actual game situation for display of the skills appropriately.

SWIMMING & DIVING

Skills

1. Back Stroke

(a) The stationary leg action with the support of the ball or a partner.

(b) Leg action with the move, hands by the side of thighs or at a later stage stretch.

(c) Arm action with the support of the partner or the ladder, alternate movement of arms.

(d) Combinations of leg and arm action. Since the face is above the water level there is not much problem of breathing.

(e) Once the movement are coordinated than the attempt should be for speed improvement.

2. Butterfly Stroke

(a) Arm action in standing position over the shallow water.

(b) Arm action on the move in the horizontal position.

(c) Preliminary hip movement in standing as well as horizontal position with the support of the wall. The hips have to be pushed up and down alternatively.

(d) Dolphin kick with the arm on the side or in front.

(e) Dolphin kick with the body on the side as well.

(f) Full stroke with a slow attempt to coordinate arm leg movements and breathing.

3. Individual medley and medley and free style relays

4. Starts and turns

Starts

(i) Grab

(ii) Conventional (Circular armswing) :

(iii) Bunch start

(iv) Track start

Turns

(i) Lateral (pivot) turn

(ii) Throwaway turn

(iii) Flip turn

5. Diving

(a) Back dive

(b) Inward dive

Scheme of Grading

50% Marks will be awarded on the basis of students performance on objective test and 50% on the basis of rating in actual play and preferably by panel of three professional teachers in physical education.

Code	Breast Stroke	Free style Stroke	Back stroke	Butterfly Stroke
Al	0 M 40 Sec.	0 M 30 Sec.	0 M 35 Sec.	0 M 50 Sec.
A2	0 M 50 Sec.	0 M 40 Sec.	0 M 45 Sec.	I M 00 Sec.
BI	I M 00 Sec.	0 M 50 Sec.	M 55 Sec.	1M 10 Sec.
B2	I M 10 Sec.	I M 00 Sec.	I M 05 Sec.	I M 20 Sec.
CI	I M 20 Sec.	I M 10 Sec.	I M 15 Sec.	I M 30 Sec.
C2	I M 30 Sec.	I M 20 Sec.	I M 25 Sec.	I M 40 Sec.
D1	I M 40 Sec.	I M 30 Sec.	I M 35 Sec.	I M 50 Sec.
D2	I M 50 Sec.	I M 40 Sec.	I M 45 Sec.	2 M 00 Sec.
E	2 M 00 Sec.	I M 45 Sec.	I M 55 Sec.	2 M 10 Sec.

TENNIS

2. Variations in service

1. Chop or slice service (side spin)
2. Top Spin Service

3. Variations in strokes

1. Cross Court Drives - forehand and back hand
2. Down the line-forehand and backhand
3. Full Volley forehand/backhand from mid court
4. Half Volley forehand/backhand
5. Drop shots, Drop volley
6. Lob Strokes
7. Running approach shots

2. Besides techniques, students should be separately graded in game situation. Grading should be done by more than one person. The following points are to be borne in mind while grading students in game situations:

1. Defence
2. Attack
3. Mastery of Fundamental
4. Foot work
5. Teamwork
6. Anticipation
7. Positioning
8. Tactics and Strategy

CRICKET

Skills

1. Batting

Forward Defence, Backward Defence, Forward Stroke, Backward Stroke, Cover Drive, Pull, Cut, Hook, Glance, Stepping out to drive the flighted ball,

2. Bowling

Out-swing, In-swing, Off Break, Leg Break and Googly,

3. Fielding

Catching - high and slip catches, throwing at the stumps from different angles,

4. Wicket Keeping

5. Lead up games

(a) Bucket Cricket
(b) Soft ball game
(c) Target hitting for fielding practice

6. Tactics

(a) Field placing to different types of bowling and batting.
(b) Captaincy - Duties of the captain, responsibilities under different situations
(c) Wicket keeping

Scheme of Grading

50% Marks will be awarded on the basis of students performance on objective test and 50% on the basis of rating in actual play and preferably by panel of three professional teachers in physical education.

Batting

The batting ability of the players be tested at the net according to the merit of the ball and the manner in which played by them should be judged and graded, The bowling should be done by different types of bowlers (fast, spin, etc,), Players to be graded out of 9 points.

Bowling

The bowlers should be asked to bowl their normal run-up using their own styles of bowling. Different marks be made on the pitch at a distance of 8 feet from the popping crease for medium fast bowlers and about 4 feet from the popping crease for slow bowlers, 9 chances be given to each player.

(a)	Perfect with style, direction, length and accuracy	A1 = 9 points
(b)	Bowling with correct style on the stump	A2 = 8 points
(c)	Bowling correctly within a distance of one foot on either side of the wicket	B1 = 7 points
(d)	Bowling within a distance of one foot rather on the off-side,	B2 = 6 points
(e)	Bowling within a distance of one foot rather on the leg-side	C1 = 5 points
(f)	Bowling farther away on the off-side	C2 = 4 points
(g)	Bowling farther away on the leg-side	D1 = 3 points
(h)	Poor performance	D2 = 2 points
(i)	Not able to bowl at all	E = 1 point

Fielding

The players are made to stand at least 30 to 40 yds. away from the wicket.

(a) The coach or a player hits high catches. Nine catches are hit to each player. Each successful attempt gives one point.

(b) The coach hits the ball to the players in different angles. They have to run, pick-up and throw the ball to the wicket. For every correct step and picking up the player gets one point. 9 chances to be given.

VOLLEYBALL

Skills

1. The serve

(a) Overhead service (Tennis)

(b) Round arm Service

(c) Floating service (overhead and side arm)

2. The Pass

(a) Over-headpass : Two handed pass with back rolling

(b) Two handed pass with side rolling

(c) Jump and pass

(d) Under arm pass

(e) Forward dive and pass

(f) One arm pass with side rolling

3. The Set-up

(a) Setting up for quick smash

(b) Move and set-up (from back zones)

(c) Setting up in different zones at varying trajectories

4. The Net Recovery

(a) Two handed overhead pass with and without rolling

(b) One hand underarm pass with and without rolling

5. The Attack

(a) Smash with turn of body

(b) Smash with wrist

(c) Round arm smash

(d) Smash on short pass (ascending balls)

(e) Simple attack combinations

6. The Block

(a) Double block against different types of attack

(b) Double block in assigned Zones

(c) Double block against quick attack

(d) Double block against attack combinations

(e) Triple block against attack from zone 3

7. Lead up Games

(a) Bounce Volleyball

(b) Shover ball

(c) Double (two against two)

(d) Three against three

8. Patterns of Play

4-2 system

5-1 system

Scheme

50% Marks will be awarded on the basis of students performance on objective test and 50% on the basis of rating in actual play and preferably by panel of three professional teachers in physical education.

Service

Nine attempts allowed. One point for each successful attempt. The successful attempt would mean the ball crossing the net within the side markers and falling in to the opponent's court.

Under Hand Pass

Nine attempts allowed. One point for each successful attempt is awarded. Underhand pass is to be executed from a service, served sidearm or roundarm from the other side of the court. The successful attempt will constitute the receiving of the correct ball raised higher than the upper band of the net. The ball crossing the net will constitute a fault and hence will not be given credit. Similarly the ball slipping from hand and going away outside the court will be given no grade.

Booting

Nine attempts allowed. One point for each successful attempt. The candidate stands in No.3 zone and is given a ball to be boosted to zone No.4. The ball must rise higher than upper band of the net. No point will be awarded in the following situations:

(a) The ball crossing into opponent's own court

(b) The ball landing outside one's own court

(c) The ball passed but away from the attack area

(d) Mispass

(e) Other faults in testing double touch etc.

Spiking

Nine attempts allowed. One point for each successful attempt. Smash is to be executed from No.2 zone. The ball is supplied from No.6 zone that is the centre of court and pass is raised from No.3 zone (facing the smasher).

Blocking

Nine attempts allowed. One point for each successful attempt. Block is to be executed in No. 2 and 4 zones alternatively. Reasonably good smash IS made from the opponents zones Nos. 4

and 2 and the candidate adjust the block.

(a) The ball going direct to the opponent's court after block will be treated as a correct attempt and should get full credit.

(b) The ball landing into one's own court as a good attempt should get full credit.

GYMNASTICS

1. Floor Exercises

(a) Forward roll to hand stand

(b) Backward roll to hand stand

(c) Forward roll to head spring

(d) Hand spring to dive roll

(e) Round off to back roll to hand stand

(f) Round off Flick Flack

(g) One leg hand spring

(h) One leg head spring

(i) Forward roll hand turns

(j) Hand stand to forward roll with straight legs

2. Vaulting Box

(a) Split vault

(b) Through vault

(c) Hand stand with cart wheel

(d) Cart wheel

(e) Hand spring

3. Parallel Bars

(a) Up start

(b) Front uprise

(c) Shoulder stand

(d) Hand stand

(e) Hand stand with 180 degree turn

(f) Hand stand to front turn on the shoulder

(g) Backward roll

(h) Hand stand to cart wheel (dismount)

4. Horizontal Bar

(a) Up start with over grip

(b) Up start with under grip

(c) Short circle

(d) One leg circle with wheel food

(e) Heel foot

(f) Front giant circle

(g) Swing with through vault (dismount)

For Girls

1. Floor Exercises

(a) Forward roll to hand stand

(b) Backward roll to hand stand

(c) Round off

(d) Slow back hand spring

(e) Slow back head spring

(f) Split sitting

(g) Slow hand spring

(h) Hand spring

(i) Head spring

2. Vaulting Box

(a) Astride vault or split vault

(b) Through vault

(c) Hand spring

3. Beam

(a) Gallop step with balance

(b) Scissor jump

(c) Forward roll

(d) Backward roll

(e) Cart wheel

(t) Bridge

(g) Balance

(h) Jumping with split legs

Scheme of Grading

50% Marks will be awarded on the basis of students performance on objective test and 50% on the basis of rating in actual play and preferably by panel of three professional teachers in physical education.

Top Grade performance	Al = 9 points
Perfect performance	A2 = 8 points
Satisfactory performance, except for bent knees or unpointed toes	B I = 7 points
Average performance knees and bent and toes are not pointed	B2 = 6 points
No form but there is knowledge of how to perform the stunt.	CI = 5 points
Some ability to perform the stunt with extremely poor form and knowledge of the stunt	C2 = 4 points
Poor performance	D I = 3 points
Worst performance	D2 = 2 points
Inability to perform the stunt	E = I point

YOGA

Note: Only such exercise which will develop higher levels of proficiency in performance beyond the levels of normal individual are included. However, highly complicated and difficult exercises which may be necessary for a true devotee in YOGA are not included.

Asanas

1. Tadasana (heavenly stretch pose)
2. Vrikshasana (tree pose)
3. Trikonasana (Triangle stretch pose)
4. Gomukhasana (cow face pose)
5. Padmasana (Lotus pose)
6. Vajarasana (thunderbolt pose)
7. Matsyasana (fish pose)
8. Bhujangasana (cobra pose)
9. Salabhasana (locust pose)
10. Chakrasana (Wheel pose)
11. Paschimottanasana (back stretch pose)

12. Ardh Matsyendrasana (half spinal twist pose)
13. Sarvangasana (shoulder stand pose)
14. Halasana (plough pose)
15. Shavasana (corpse pose)

Pranayam

1. Sheetali Pranayama (the cooling breath)
2. Sheetkari Pranayama (the hissing breadth)
3 Kapalabhati pranayama (the frontal brain bellowing)
4. Ujjai Pranayama (the psychic breadth)

Grading Plan

The grading will be done using a nine point scale. A student should select any five Asanas and two Pranayama for demonstration. The grades will be awarded keeping in view the following criteria:

(i) Smooth succession of movement from the initial to final position.

(ii) Degree of perfection in the final form.

(iii) Evidence of strain or tension (negative aspect).

(iv) Holding final position for some time, more in balancing exercises.

28. Fashion Studies (Code No. 053)

Preamble:

Fashion is dynamic and ever changing. It is one of the most powerful forces in our lives. It influences every facet of our lifestyle at a particular period in time e.g. the clothes we wear, the music we listen, the food we eat, where we go for holiday or the car we drive in etc.

Fashion is a big business and key driver for several industries e.g. apparel, accessories, textiles, automobiles etc.

The purpose of the course 'Fashion Studies' is to tell the students about the fundamentals of fashion design. Fashion Design as profession includes the entire process of designing and producing fashion apparels from the fibre and yarn stage to the finished product. The course will give an overview of fashion design and elaborate on different aspects like elements of dsign, history of fashion, fabrics, understanding of the body, pattern development and garment construction.

CLASS XI

Unit - I : Introduction to Fashion Studies 10 Marks 30 Periods

Objectives of the course

✓ To learn appropriate fashion terminology

✓ To understand the fashion business

✓ To gain knowledge of the working and interrelationships of different industries and services that comprise fashion business

✓ To differentiate and appreciate the nuances of fashion terminology

Learning outcome

After finishing the course, the students shall be able

✓ To use appropriate terminology used in fashion world

✓ To understand the interrelationship in fashion business

✓ To get the overview of fashion

Course content

✤ Fashion-definition of fashion in all its aspects.

✤ Style-the definition of style and differentiation from fashion.

✤ Trend-definition of the term, origin of trends and fashion.

✤ Understanding the similarity and difference between design art and craft.

✤ Understanding the role of fashion professionals like designer, stylist, merchandiser and coordinator.

- ✤ Product cycle and the link between yarn- fabric- garment.
- ✤ The various aspects of fashion business. designing, manufacturing and retailing scenarios for apparel.

Methodology of teaching: Illustrated lectures with slides and visuals

Reference Text: Concept to consumer, by Gini Stephens Frigns
Inside Fashion Business, by V. Jeanette A. Jarrow,
Miriam Guerriro, Beatrice Judelle

Unit. II: Introduction to Fabrics 20 Marks 50 Periods

Objectives of the course

- ✓ To initiate stents into the world of fabrics
- ✓ To introduce students to the origin and properties of natural, manmade and synthetic fibres and fabrics.
- ✓ To make students aware of spinning, weaving, knitting and bonding etc.
- ✓ To teach the students behavior of fabrics in terms of use and performance.
- ✓ To brief them about various finishes.

Learning outcome

After finishing the course, the students shall be able

- ➢ To identify and differentiate between fabric varieties
- ➢ To understand the various processes of fabric manufacturing'
- ➢ To understand the various kinds of finishes both 0' routine nature and special finishes that enhance performance and aesthetics of the fabric.

Course content

- ✤ Uses of fabrics-for various categories of apparel.
- ✤ Understanding the characteristics and properties of natural, synthetic and manmade fibres and blends.
- ✤ Conversions of fibres into yarns, novelty yarns, difference between thread and yarn. -
- ✤ Conversion of yarns into fabrics using looms & knitting machines etc. illustrated through actual fabric samples.
- ✤ Understanding different type of routine fabric finish - from grey fabric to fully finished fabric.
- ✤ Performance finishes: fabric finishes enhancing properties of fabrics such as shrink resistance, permanent press, flame retardant etc.

- ✤ Aesthetic finishes: Fabric finishes for value addition of the fabrics such as printing, embossing, dyeing etc.

Teaching Methodology: Illustrated lectures with slides and visuals along with actual fabric samples. A teacher would be expected to create a library of fabrics to explain conduct the classes.

Reference Text: 'Textiles' by Sara Kadolph & Anna Langford
Essentials of Textiles, by Marjorie Joseph.

Unit - III: Elements of Design 20 Marks (Theory) 80 Periods
15 Marks (Practical)

Objectives of the course:

- ✓ To introduce the students to the basic elements of design
- ✓ To increase and build sensitivity to the forms around them
- ✓ To develop and initialise a design vocabulary, an essential tool for practicing as designers
- ✓ To create visual images with a greater variety of methods and materials to provide unexpected excitement and solutions.

Learning outcome

After finishing the course, the students shall be able

- ➢ To demonstrate enhanced ability and sensitivity to elements of design
- ➢ To use their developed ability to observe finer details around them
- ➢ To develop basic design language
- ➢ To relate the elements of design to understand design process for their projects

Course content

- ✤ Understand the concept of design.
- ✤ Understanding line as an important element of structure that determines the direction of visual interest in the context of a garment.
- ✤ Understanding 2D and 3D forms.
- ✤ Understanding the colour quality, intensity, relationship with other colours, textures, shape etc.
- ✤ Selection of fabric for its appearance and texture- fibre, yarn, manufacturing technique, finish and colour.
- ✤ Harmony to achieve the condition in which all the elements of design work together successfully.

✤ Understanding of balance and proportion to enable the students to emphasize or to underplay certain elements.

Teaching Methodology: Illustrated lectures with slides, visuals and demonstrations wherever required.

Evaluation Criteria

- Understanding of the assignment given
- Quality of the work submitted
- Daily assessment to be done after each student presents their work
- Marks would be given for level of improvement of work
- 10%Ci marks to be given for punctuality, regularity and sincerity
- Timely completion of the project

Reference Text: 'Grafix' by Wolfganghageney

Repeat pattern-Peter Phillips, Gillian Bunce

Design Elements 2 -Richard Hora

Unit - IV : Elements of Garment Making 20 Marks (Theory) 80 Periods 15 Marks (Practical)

Objectives of the course

✓ To Introduce the students to garment making

✓ To make them familiar with sewing machine and its parts

✓ To make them familiar with use of other sewing aids

✓ To teach them basic hand and machine stitches

✓ To teach them simple machine operations

Learning outcome

After finishing the course, the students shall be able

➢ To work proficiently on the sewing machine

➢ To rectify simple problems of the machine

➢ To stitch different seams on the machine

➢ To finish edges with hand stitches

➢ To make gathers, pleats and tucks on the fabric

Course content

✤ Introduction to sewing machine, its various parts and functions along with other sewing aids.

✤ Understanding the simple problems of sewing machine and its maintenance.

- ✤ Develop proficiency in straight and curved seams.
- ✤ Basic hand stitches - basting, hemming, back stitch, running stitch etc. with their end use.
- ✤ Basic machine seams used for stitching or finishing various parts of the garments like plain seam French seam, flat fell, lapped etc.
- ✤ Fabric manipulation like gathers, pleats and tucks etc.

Teaching Methodology: Illustrated lectures with slides, visuals and demonstrations where ever required.

Evaluation Criteria

- Understanding of the assignment given
- Quality of the work submitted
- Daily assessment to be done after each student presents their work
- Marks would be given for level of improvement of work
- 10% marks to be given for punctuality, regularity and sincerity
- Timely completion of the project

Reference Text: Encyclopaedia of Dressmaking, by Marshall Cavendish

Readers Digest book of Sewing, Encyclopedia of Sewing.

Fashion Studies

Class - XI Practicals

- Exercises using elements of art like line, form, colour, texture, space etc. following the principles of design
- Exercises on colour wheel, value chart, intesity chart, colour schemes
- Exercises on hand stitches - basting, running, hemming, back stich and its variations
- Seams - plain, French, lapped, flat fell, Hongkong, eased and top stiched
- Gathers, pleats and tucks
- End term project
- Viva voce and portfolio

CLASS-XII

Unit - I: History of Fashion 15 Marks 40 Periods

Objectives of the course

- ✓ To give an overview of the history of fashion from ancient civilisation through the ages to the present.
- ✓ To emphasise on the socio-economic and political factors influencing clothing and fashion.

Learning outcome

After finishing the course, the students shall be able

- ➢ To understand the history of fashion through the ages
- ➢ To be aware of origin of various trends
- ➢ To differentiate the style of apparel in different cultures
- ➢ To appreciate the differences that some of the important events have made on fashion

Course content

- ✤ Theories of clothing - adornment, protection, identification and ritualistic.
- ✤ Concept of fashion
  - ✓ Body decoration, painting scarification
  - ✓ Draping - Greco-Roman, Indian and other continents
  - ✓ Stitched garments - war uniforms, amours inspired
  - ✓ Comparison of western and oriental war uniforms
- ✤ Influence of world wars on fashion - post war fashion in its most primitive sense became generalize to larger groups of people as society became organized in classes each having a different role in economic, social and intellectual development.
- ✤ Influence of industrial revolution-the twentieth century has witnessed a new situation with industrial revolution where textiles and clothes traditionally custom made are now being mass produced.
- ✤ Automation and the various technical and scientific developments shaping the finest classless society m many centuries.
- ✤ Evolution of Indian fashion in the last century.

Teaching Methodology: Illustrated lectures with slides and visuals

Reference Text: Kaleidoscope of fashion, by Mehar Castilino
Ancient Indian Costume, by Roshan Alkazi

Unit - II. Basic Pattern Development 20 Marks (Theory) 80 Periods 15 Marks (Practical)

Objectives of the course

- ✓ To introduce students to the world of fashion designing through pattern development.
- ✓ To explain important skill that enable the designer to convert a design sketch into a three dimensional form.
- ✓ To develop basic blocks for bodice, sleeve and skirt.
- ✓ To understand and implement the concept of test fits and to convert paper patterns into muslin.

Learning outcome

After finishing the course, the students shall be able

- To understand the basic skill of pattern making
- To understand and appreciate the concept of fit and balance
- To develop basic blocks from measurement charts
- To test fit the pattern
- To Develop patterns for simple designs using basic blocks

Course content

- Methods of measuring body and dress form.
- Relationship of sizes and measurements.
- Tools of pattern making.
- Common terms used in pattern development.
- Introduction to Pattern Development for women swear - how patterns are made and developed, the importance of fit and balance and methods of achieving it.
- Basic bodice - developed from the standard measurement chart and test fitted on the dress form.
- Marking the important details such as darts, seam allowances, notches, grain lines etc.
- Marking of garment details i.e. Armholes, Necklines- V, U, round, boat, square.
- Develop basic sleeve block and set into the armhole of the basic bodice.
- Develop basic skirt block with one dart or two darts.
- Basic or collar development and drafting basic collars like Peter Pan and Chinese.
- Dart manipulation. the mechanism of shifting darts from one position to another or into a seam by slash and spread method.

Final product Student will learn to develop patterns from basic blocks for simple designs for skirts and blouses.

Teaching Methodology: Illustrated lectures with slides, visuals and demonstrations where ever required.

Evaluation Criteria

- Understanding of the assignment given
- Quality of the work submitted
- Daily assessment to be done after each student presents their work
- Marks would be given for level of improvement of work
- 10% marks to be given for punctuality, regularity and sincerity
- Timely completion of the project.

Reference Text Pattern making by Helen Armstrong

Pattern making for women's wear by Winifred Aldrich

Pattern making by Pamela Stringer.

Unit. III: Elements of Fashion 15 Marks 40 Periods

Objectives of the course

✓ To introduce students to the basic elements of fashion:

✓ To teach students about movement of fashion, fashion cycle, categories of clothing etc.

✓ To sensitise students about different items of garments in each category i.e. menswear, womenswear and chilrenswear

✓ To teach students the difference between high fashion and mass fashion

✓ To distinguish between custom made & ready to wear

Learning outcome

After finishing the course, the students shall be able

➢ To understand the elements of fashion

➢ To be aware of movement of fashion

➢ To understand the fashion cycle - -,

➢ To know the various categories of menswear, womenswear and childrenswear

➢ To understand the difference between hi-fashion & mass fashion and custom made & ready to wear.

Course content

✤ Menswear, women's wear and kidswear

✤ Menswear - shirts, trousers, formal jackets, suit and sporty suit

✤ Womenswear-dresses, blouses, skirts, trousers, kameezes, saris and blouses

✤ **Kids wear** - categories of children for 0-15 years and various germents like frocks, skirts, blouses trousers, dungarees, jackets etc. highlighting the need of age group for which they are designed.

✤ Trims used for the fashion apparel

✤ Hi-fashion-custom and ready to wear

✤ Mass fashion-ready to wear

Teaching Methodology: **Illustrated lectures with slides and visuals.**

Reference Text: Concept to consumer by Gini Stephens Frings

Encyclopaedia of Fashion details

Unit - IV: Basics of Garment Making 20 Marks (Theory) 80 Periods 15 Marks (Practical)

Objectives of the course

- ✓ To assemble a garment
- ✓ To construct a bodice using different seams
- ✓ To make a placket for bodice opening
- ✓ To finish a neckline by both piping and facing
- ✓ To set in a sleeve in the arm hole
- ✓ To put gathers or pleats in the skirt and finish the waist with a waist band or attach a bodice.

Learning outcome

After finishing the course, the students shall be able

- ➢ To join various parts of the garment and construct a complete garment
- ➢ To finish a bodice
- ➢ To set in the sleeve
- ➢ To stitch a skirt

Course content

- Understanding fabric types and selection of underlining, interfacing, inter-lining and lining.
- Marking methods and preparing fabric for cutting
- Pattern layout and cutting of special fabrics
- Assembling of bodice using different seams and appropriate finish for side seam and shoulder seams.
- Concept of slit and seam plackets. Various plackets and placement of fasteners on different parts of the garment.
- Appropriate neckline finishes with piping, bias facing and shaped facing. Importance and use of stay stitching.
- Sleeve attachment to the bodice by setting in the sieve into armhole.
- Assembling of skirts, finishing gathers and pleats in a waistband.

Final product

Constructing a skirt and blouse using pattern template.

Teaching Methodology: Illustrated lectures with slides, visuals and demonstrations where ever required.

Evaluation Criteria

- Understanding of the assignment given
- Quality of the work submitted
- Daily assessment to be done after each student presents their work
- Marks would be given for level of improvement of work

- 10% marks to be given for punctuality, regularity and sincerity
- Timely completion of the project.

Reference Text: Encyclopaedia of dressmaking by Marshall Cavendish
Readers Digest book of Sewing
Encyclopaedia of Sewing

Class - XII Practicals

- Prepare draft and test fit according to the measurements of the dress form the following- womenswear basic block, sleeve block, skirt block, collars - Chinese and peterpan
- Exercises on dart manipulation using slash and spread method

Garment stitching and finishing

- Darts
- Waist bands
- Pockets
- Placket - slit and seam
- Neckline finish
- Sleeve attachments
- Construction of garment - skirt and blouse using pattern templates
- End term project
- Viva voce and portfolio

Lab requirement for a batch of 30 students

Lab size - 35ft x 20 ft. (minimum)

AC environment

Item	**Nos.**
Industrial sewing machines with power (costs at least Rs. 4,500/- each)	**30**
Pattern Making tables 5 ft x 4 ft (cork top)	**8 (4 students/tab)**
Dress forms (half) costs Rs. 8000/- each	**30 (one per student)**
Steam irons @ Rs. 1000/-	**4**
Ironing boards @ Rs. 500/-	**4**
Soft boards	**All around the wall**
Stools	**30**
White board	**1**
Black board	**1**

Approximate cost will be Rs. 5,00,000/-

Selection criteria of school

They should have ability to provide appropriate environment, space, equipment, machinery and maintenance, trained faculty, exclusive library for the course, willingness to upgrade facility and faculty.

29. Fine Arts

A student may offer anyone of the following courses:

(a) **Painting** (Code No. 049)

OR

(b) **Graphics** (Code No. 050)

OR

(c) **Sculpture** (Code No. 051)

OR

(d) **Applied Arts-Commercial Arts** (Code No. 052)

The following art terminologies for all the four subjects are prescribed only for reference and general enrichment.

1.	Elements of Composition	:	Point, line form, colour, tone texture and space.
2.	Principles of Composition	:	Unity, harmony, balance, rhythm, emphasis and proportion, abstraction and stylisation.
3.	Drawing & Painting	:	Terminologies-Foreshortening, perspective, eye- level, fixed point of view, Vanishing point, ratio proportion, sketching, proportion sketching, drawing, light & shade, painting still-life, land- scape, anatomy, vertical, horizontal, two & three dimensional, transparent & opaque.
	Materials	:	Paper (Cartridge, Handmade etc.), pencil, water, acrylic colours, tempera colours, poster colours, pastel colours, waterproof ink, canvas, hard-board.
4.	Media of Composition	:	Collage, Mosaic, Painting mural, fresco, batik tie & dye.
5.	Sculpture	:	Relief and round sculpture, modelling with clay, terra-cotta, carving in wood, stone, bronze casting & Plaster of Paris.
6.	Graphics	:	Linocut, relief printing, etching, Lithography, Silk screen printing letter press and offset printing.
7.	Applied Art	:	Book cover design and illustration, cartooning, poster, advertisements for newspaper and magazine etc., photography, computer graphic.

(a) Painting
(Code No. 049)

Introduction

The course in Painting at Senior Secondary stage as an elective subject is aimed to develop aesthetic sense of the students through the understanding of various important well known aspects and modes of visual art expression in India's rich cultural heritage from the period Indus valley to the present time. It also encompasses practical exercises in drawing and painting to develop their mental faculties of observation, imagination, creation and physical skills required for its expressions.

Objectives

(A) Theory (History of Indian Art)

The objective of including the history of Indian Art for the students is to familiarise them with the various styles and modes of art expressions from different parts of India. This would enrich their vision and enable them to appreciate and develop an aesthetic sensibility to enjoy the beauty of nature and life. The students will also have an opportunity to observe and study the evolution of its mutations and synthesis with other style and the rise of an altogether new style. The students should be made aware of art as a human experience. The teachers should be able to expose them to the wide range of artistic impressions, the media and the tools used. The history of Indian Art is a long one. Hence the students would be acquainted with brief glimpses of the development of Indian Visual Art as are required for concept formation. Examples included in the course of study are selected because of their aesthetic qualities and are intended purely as guidelines.

(B) Practicals

The purpose of introducing practical exercises :in Painting is to help and enable the students:

- To develop skill of using drawing and painting material (surface, tools and equipments etc.) effectively.
- To sharpen their observation skills through study of common objects and various geometrical and non-geometrical forms found in life and nature.
- To develop their skills to draw and paint these observations:
- To develop an understanding of Painting-Composition (The use of the elements and the principles of painting -composition);
- To create the forms and the colour schemes in imagination with an ability to express them effectively in drawing and painting;
- To express the different feelings and moods of life and nature in lines, forms and colours.

CLASS XI (THEORY)

One Paper **Time:11 Hour** **30 Marks**

Unitwise Weightage

Units	**Marks**
History of Indian Art	
1. Art of Indus Valley	5
2. Buddhist, Jain & Hindu Art	10
3. Temple Sculpture. Broznes and Artistic aspects of Indo- Islamic Architecture	15

Unit 1: Art of Indus Valley **12 Pds.**

(2500 B.C. to 1500 B.C.)

(1) Introduction

(i) Period and Location.

(ii) Extension: In about 1500 miles

(a) Harappa & Mohenjo-daro (Now in Pakistan)

(b) Ropar, Lothal, Rangpur, Alamgirpur, Kali Bangan, Banawali and Dhaula Veera (in India)

(2) Study of following
Sculptures and Terracottas:

(i) Dancing girl (Mohenjo-daro)
Bronze, 10.5 x 5 x 2.5 cm.
Circa 2500 B.C.
(Collection: National Museum, New Delhi).

(ii) Male Torso (Harappa)
Red lime Stone, 9.2 x 5.8 x 3 cms.
Circa 2500 B.C.
(Collection: National Museum, New Delhi).

(iii) Mother Goddess (Mohenjo-daro) terracotta, 22 x 8 x 5 cm.
Circa 2500 B.C.
(Collection: National Museum New Delhi).

(3) **Study of following**

Seal:

(i) Bull (Mohenjo-daro)
Stone (Steatite), 2.5 x 2.5 x 1.4 cm.
Circa 2500 B.C.
(Collection: National Museum, New Delhi).

(4) Study of following :

Decoration on earthen wares:

(i) Painted earthen-ware (Jar) Mohenjo-daro

(Collection: National Museum, New Delhi).

Unit 2: Buddhist, Jain and Hindu Art **24 Pds.**

(3rd century B.C. to 8th century A.D.)

(1) General Introduction to Art, during Mauryan, Shunga, Kushana & Gupta period:

(2) Study of following

Sculptures:

(i) Lion Capital from Sarnath (Mauryan period)

Polished sand stone,

Circa 3rd Century B.C.

(Collection: Sarnath Musseum, U.P.)

(ii) Chauri Bearer from Didar Ganj (Mauryan period)

Polished sand stone

Circa 3rd Century B.C.

(Collection: Patna Museum, Bihar)

(iii) Bodhisattva head from Taxila (Gandhara period)

Stone, 27.5 x 20 x 15c.m.

Circa 2nd Century A.D.

(Collection: National Museum, New Delhi)

(iv) Seated Buddha from Katra Tila Mathura-(Kushan Period)

Red-spotted Sand Stone, Circa 3rd Century AD.

(Collection: Mathura Museum)

(v) Seated Buddha from Sarnath (Gupta period)

Stone

Circa 5th century AD

(Collection: Sarnath Museum U.P.)

(vi) Jain Tirathankara (Gupta period)

Red Sand Stone,

Circa 5th Century A.D.

(Collection at State Museum, Lucknow U.P.)

(3) Introduction to Ajanta

Location, period, No. of caves, Chaitya and Vihara, Paintings and Sculptures subject matters and technique etc.

(4) Study of Following

Painting & Sculpture:

(i) Padmapani Bodhisattva (Ajanta Cave No. I)

Mural Painting

Circa 5th Century A.D.

(ii) Mara Vijay (Ajanta Cave No. 26)

Sculpture in stone.

Circa 5th Century A.D.

Unit 3: Temples Sculpture, Bronzes and Indo-Islamic Architecture 36 Pds.

Artistic aspects of Indian Temples

(6th Century A.D. to 13th Century A.D.)

(1) Introduction to Temple Sculpture

(6th Century A.D. to 13th Century A.D.)

(2) Study of following Temple-Sculptures;

(i) Descent of Ganga (Pallava period, Mahabalipuram Tamilnadu), Granite rock Circa 7th Century A.D.

(ii) Ravana shaking Mount Kailash (Rashtrakuta period, Ellora, Maharashtra) Stone 8th Century A.D. ,

(iii) Trimurti (Elephanta, Maharashtra)

Stone

Circa 9th Century A.D.

(iv) Lakshmi Narayana (Kandariya Mahadev Temple) (Chandela period, Khajuraho, M.P.)

Stone

Circa 10th Century A.D.

(v) Cymbal Player, Sun Temple (Ganga Dynesty, Konark, Orissa)

Stone.

Circa 13th Century A.D.

(vi) Mother & Child (Vimal-Shah Temple, Solanki Dynesty, Dilwara, Mount Abu, Rajasthan) White marble.

Circa 13th Century A.D.

(3) Bronzes : **12 Pds.**

(i) Introduction to Indian Bronzes

(ii) Method of casting (solid and hollow)

(4) Study of following south Indian Bronzes:

(i) Nataraj (Thanjavur Distt., Tamilnadu)

Chola period (12th Century A.D.)

(Collection: National Museum, New Delhi.) I

(ii) Devi (Uma)

Chola Period (11th Century A.D.)

(Collection: National Museum, New Delhi.)

(5) Artistic Aspects of the Indo-Islamic Architecture **12 Pds.**

(i) Introduction

(6) Study of following architectures:

(i) Qutab Minar, Delhi

(ii) Taj Mahal, Agra

(iii) Gol Gumbaj of Bijapur.

CLASS XI (Practical)

One Paper **Time: 6 Hours** **70 Marks**

Unitwise Weightage

Units		Marks
1.	Nature and Object Study	25
2.	Painting Composition	25
3.	Sessional Work	20

Unit 1: Nature and Object Study **60 Pds.**

Study of two or three natural and geometric forms in pencil with light and shade from a fixed point of view. Natural forms life plants, vegetables, fruits and flowers etc., are to be used.Geometrical forms of objects like cubes, cones, prisms, cylinders and sphere should be used.

Unit 2: Painting Composition

(i) Simple exercises of basic design in variation of linear geometric and Rhythmetic shapes in primary and secondary colours to understand designs as organised visual arrangements. (15) 36 Pds.

(ii) Sketches from Life and Nature (10) **24 Pds.**

Unit 3 : **Sessional Work**

(a) Five selected Nature and object study exercises drawings in any media done during the session including minimum of two still life exercise. (10) **24 Pds.**

(b) Two selected works of paintings done during the year (10) **24 Pds.**

These selected works prepared during the course by the candidates and certified by the school authorities as the work done in the school will be placed before the examiners for assessment.

Note: The time-table to be so framed as to allow the students to work continuously for minimum of two periods at a stretch.

CLASS XII (THEORY)

One Theory Paper **Time: 1 Hour** **30 Marks**

Unitwise Weightage

Units	Marks
History of Indian Art	
1. The Rajasthani and Pahari Schools of Miniature Painting	10
2. The Mughal and Deccan Schools of Miniature Painting	10
3. The Bengal School of Painting and the Modern Trends in Indian Art	10

Unit 1: The Rajasthani and Pahari Schools of Miniature Painting (16th Century A.D. to 19th Century A.D.) **24 Pds**.

Introduction to Indian Miniature Schools: Western-Indian, Pala, Rajasthani, Mughal, Central India, Deccan and Pahari.

(A) The Rajasthani School :

(1) Original and Development

(2) Sub-Schools-Mewar, Bundi, Jodhpur, Bikaner, Kishangarh and Jaipur

(3) Main features of the Rajasthani Schools

(4) Study of the following Rajasthani Paintings:

Title	Painter	Sub-School
Maru-Ragini	Sahibdin	Mewar
Raja Aniruddha Singh Hara	Utkal Ram	Bundi
Chaugan Players	Dana	Jodhpur
Krishna on swing	Nuruddin	Bikaner
Radha (Bani- Thani)	Nihal Chand	Kishangarh
Bharat meets Rama at Chitrakut	Guman	Jaipur

(B) The Pahari School:

(1) Origin and development

(2) Sub-Schools-Basohli and Kangra

(3) Main features of the Pahari School

(4) Study of the following Pahari Paintings:

Title	**Sub-School**
Krishna with Gopis	Basohli
Raga Megha	Kangra

Unit 2: The Mughal and Deccan Schools of Miniature Painting (16th Century AD to 19th Century A.D.) **24 Pds.**

(A) The Mughal School

(1) Origin and development

(2) Main features of the Mughal School

(3) Study of the following Mughal Paintings:

Title	**Painter**	**Period**
Krishna lifting mount Goverdhan	Miskin	Akbar
Babur Crossing the river sone	Jagnath	Akbar
Jahangir holding the picture of Madona	Abul Hassan	Jahangir
Falcon on a bird rest	Ustad Mansoor	Jahangir
Kabir and Raidas	Ustad Faquirullah Khan	Shahjahan
Marriage procession of Dara Shikoh	Haji Madni	Provincial Mughal (Oudh)

(B) The Deccan School

(1) Origin and development

(2) Main features of the Deccan School

(3) Study of the following Deccan Paintings:

Title		**Sub-School**
Dancers	.....	Hyderabad
Chand Bibi Playing Polo (Chaugan)		Gol Konda

Unit 3: The Bengal School and the Modern trends in Indian Art **24 Pds.**

(A) (I) A. New Era in Indian Art-an introduction

B. Study of the following painting

(i) Rama Vanquishing the pride of the ocean-Raja Ravi Varma

(2) Evolution of the Indian National Flag (First - 1906, Middle - 1921 and Final 1947 stages) : Study of the form and the colour scheme

(B) (1) Introduction to the Bengal School of Painting

(i) Origin and development of the Bengal School

(ii) Main features of the Bengal School

(2) **Contribution of Indian artists in the struggle for National Freedom Movement**

(3) Study of the following paintings of the Bengal school:

(i) Journey's End - Abanindranath Tagore

(ii) Parthasarthi - Nandlal Bose

(iii) Radhika - M.A.R. Chughtai

(C) The Modern Trends in Indian Art

Introduction

(1) Study of the following Paintings:

(i) Magician-Gaganendranath Tagore

(ii) Mother and child-Jamini Roy

(iii) Woman Face-Rabindranath Tagore

(iv) Three Girls-Amrita Sher Gil

(2) Study of the following pieces of Sculpture:

(i) Triumph of Labour-D.P. Roychowdhury

(ii) Santhal Family-Ramkinker Vaij

(3) Study of the following work of contemporary Indian Art'

A. Paintings

(i) Mother Teresa-M.F. Husain.

(ii) Birth of Poetry-K.K. Hebbar

(iii) Gossip-N.S. Bendre

(iv) Untitled-G.R. Santosh

(v) Diagonal- Tyeb Mehta

(4) Graphic prints

(i) Whirl pool-Krishna Reddy

(ii) Children-Somnath Hore

(iii) Devi-Jyoti Bhatt

(iv) Of Walls-Anupam Sud

(v) Man, Woman and Tree K. Laxman Goud

(5) Sculptures

(i) Standing Woman-Dhanraj Bhagat

(ii) Cries Un-heard-Amar Nath Sehgal

(iii) Ganesha- P.V.Jankiram

(iv) Figure- Sankho Chaudhuri

(v) Chatturmukhi- Aekka Yada Giri Rao

Note: The names of artists and their art work as listed above are only suggestive and in no way exhaustive. Teachers and students should expand this according to their own resources. However, the questions will be set from the above mentioned art works only.

PAINTING

CLASS XII (PRACTICAL)

One Paper **Time: 6 Hours** **70 Marks**

Unitwise Weightage

Units	Marks
1. Nature, and Object Study	25
2. Painting Composition	25
3. Sessional Work	20

Unit 1: Nature and Object study **60 Pds.**

Studies on the basis of exercises done in class XI with two or three objects and drapery for background. Exercises in pencil with light and shade and in full colour from a fixed point of view.

Unit 2: Painting **60 Pds.**

Imaginative painting based on subjects from Life and or Nature in water and poster colours with colour values.

Unit 3: Sessional Work **48 Pds.**

(a) Five selected Nature and object Study exercises in any media done during the session, including minimum of two still life exercises. (10)

(b) Two selected works of paintings done by the candidate during the year (10)

These selected works prepared during the course by the candidate and certified by the school authorities as the work done in the school will be placed before the examiners for assessment.

Note: The time-table to be so framed as to allow the students to work continuously for minimum of two periods at a stretch.

Guidelines for Evaluation of Practical,

Marking Scheme:

Part I:	**Nature and Object Study,**			
	(i)	Drawing (composition)	10	
	(ii)	Treatment of media/colours	10	25 marks
	(iii)	Overall impression	5	
Part II:		**Painting (Composition)**		
	(i)	Compositional arrangement including emphasis on the subject	10	25 marks
	(ii)	Treatment of media colour	10	
	(iii)	Originality and overall impression	5	
Part III:		**Sessional Work**		
	(i)	Five selected Nature and object study exercises in any media including minimum of two still lives	10	
	(ii)	Two selected painting compositions prepared on the basis of life and nature	10	20 marks

Note: Sessional-work will also be evaluated on the same pattern.

Format of the Questions:

Part I: Nature and Object Study

Draw and paint the still-life of a group of objects arranged on a drawing board before you, from a fixed point of view (given to you), on a drawing paper of half imperial size in pencil/ colours. Your drawing should be proportionate 'to the size of the paper. The objects should be painted in realistic manner with proper light and shade and perspective etc. In this study the drawing-board is not to be included.

Note: A group of objects to be decided by the external and internal examiners jointly as per instructions. The objects for Nature study and object study are to be arranged before the candidates.

Part II: Painting:

Make a Painting-Composition on anyone of the following five subjects in any medium (Water/ Pastel, Tempera, Acrylic) of your choice on a drawing-paper of half imperial size either horizontally or vertically. Your composition should be original and effective. Weightage will be given to a well composed drawing, effective use of media, proper emphasis on the subject matter and utilization of full-space.

Note: Any five subjects for Painting Composition are to be decided by the external and internal examiners jointly as per instructions and are to mentioned here strictly just before the start of the examination for part II.

3. (A) Instructions for the selection of the objects for Nature Study and Object Drawing:

1. The examiners, are to select/decide two or three. suitable objects in such a way so that Natural and Geometrical forms may be covered in the group of objects:

   (i) Natural-forms-large size foliage and flowers, fruits, and vegetables etc.

   (ii) Geometrical forms made of Wood/Plastic/Paper/ Metal/Earthen etc. such as cube, cone, prism, cylinder and sphere.

2. Objects should be selected generally of large (suitable) size.

3. An object relating to nature, according to the season and location of the examination centtre, must be included in the group of objects. The natural-objects should be purchased/arranged only on the day of the examination so that its freshness may be maintained.

4. Two draperies in different colours (one in dark and other in light tone) are also to be included for background and foreground, keeping in view the colours and tones of the objects selected.

(B) Instructions to decide the subjects for Painting-Composition:

1. The examiners, are to select/decide five subjects suitable for Painting-Composition.

2. The subjects should be so designed that the candidates may get clear-cut ideas of the subjects and they can exercise their imagination freely, because it is not important what you do, but how you do it.

3. The examiners are free to select/decide the subjects, but these should be according to the standard of Class XII and environment of the school/candidates.

   Some identified areas of the subjects for Painting-Composition are given below, in which some more areas may also be added:

   (i) Affairs of family friends and daily life.'

   (ii) Affairs of family Professionals.

   (iii) Games and sports activities.

   (iv) Nature

   (v) Fantasy

   (vi) National, religious, cultural, historical and social events and celebrations.

4. General Instructions to the examiners :

1. Candidates should be given one hour break after first three hours.

2. Work of the candidates, for Parts I, II and III, is to be evaluated on the spot jointly by the external and internal examiners.

3. Each work of Part I, II and III, after assessment is to be marked as examined and duly signed by the external and internal examiners jointly.

Some Reference Books Suggested for Teachers:

1. "Paint Still life" by Claretta White yet to be revised (Walter T. Foster Publication).

2. "Art of Drawing" Grumbacher Library Wook (Walter T. Foster Publication).
3. "Collage" by Dixi Hall (Walter T. Foster Publication).
4. "On Techniques" By Leon Frank (Walter T. Foster Publication).
5. "More Trees" by Fredrick Gardner (Walter T. Foster Publication).
6. "How to Draw and Paint Textures of Animals" By Walter J. Wilweding (Water T. Foster Publication).
7. "How to Draw and Paint Animal Expressions" by Walter J. Wilweding (Walter T. Foster Publication).
8. "Art of the Pencil" by Borough Johnson (Sir ISAAC Pitman & Sons Ltd., New Delhi).
9. "Design for you" by Ethel Jane Beitler (John Wilary & Sons Ltd., New Delhi).
10. "Complete Book of Artist's Techniques by Dr. Kurt Herbers, (Thomas and Hudson, London).

B. Graphics
(Code No. 050)

Introduction

The Course in Graphics at Senior Secondary stage as an elective subject is aimed to develop aesthetic sense of the students through the understanding of various important, well known aspects and modes of Visual Art expression in India's rich cultural heritage from the period of Indus Valley to the present time. It encompasses also a wider range of practical exercises in making 'of Graphic prints for developing their mental faculties of observation, imagination creation and physical & technical skills.

Objectives

(A) **Theory (History of Indian Art)**

Note: As the syllabus of Graphics (Theory) is the same as that of Painting (Theory), its objectives are same.

(B) Practicals

The purpose of introducing practical exercises in Graphics is to help and enable to students to make simple compositions in monochrome and in colours through the various print-making techniques using methods and material specifically prescribed for adequate results. The students should be introduced to the subject by giving a short history of the print making techniques. They should be given exercises to inculcate respect for the tools and apparatus-used in the various processes including their maintenance and proper handling.

CLASS XI (THEORY)

One Theory Paper **Time: 1 Hour** **30 Marks**

Unitwise Weightage

Units	Marks
History of Indian Art	
1. Art of Indus Valley	10
2. Buddhist & Jain Art	10
3. Temples Sculptures & South Indian Bronzes	10

Notes: The Syllabus of Graphics (Theory) for Class XI is the same as that of Painting (Theory) for class XI given earlier.

CLASS XI (PRACTICAL)

One Paper Time: 6 Hours 70 Marks

Unitwise Weightage

Units	Marks
1. Relief Printing through Linocut/Woodcut/Paper-cardboard	50
2. Sessional Work	20

Unit 1: To make Linocut/Woodcut/Paper-cardboard print on 1/4 Imperial sheet on a given subject 120

Syllabus for Relief Printing (Lonocuts/Woodcuts/Paper-cardboard Prints).

1. Introduction of the history of print making.
2. Printing methods and materials.
3. Characteristics of printing inks, solvents, and dyers.
4. Registration methods.
5. Simple, colour printing techniques.
6. Mounting and finishing of the prints.

Unit 2: Sessional Work 48 Pds.

The selected prints (either from Linocuts/Woodcuts/Paper-cardboard prints) prepared during the course by the candidate and certified by the school authorities as the work done in the school are to be placed before the examiners for assessment.

Note: The time-table to be so framed as to allow the students to work continuously for minimum of two periods at a stretch.

CLASS XII (THEORY)

One Theory PaperTime: 1 Hour 30 Marks

Unitwise Weightage

Units		Marks
HISTORY OF INDIAN ART		
1.	The Rajasthani and Pahari School of Miniature Painting	10
2.	The Mughal and Deccan school of Miniature Painting	10
3.	The Bengal School of Painting and the Modern Trends in Indian Art	10

Note: The Syllabus of Graphics (Theory) for Class XII is the same as that of Painting (Theory) for class XII given earlier.

CLASS XII (PRACTICAL)

One Paper **Time: 6 Hours** **70 Marks**

Unitwise Weightage

Unit		**Marks**
1.	Making of graphic-print through Serigraphy/Lithography/Etching and Engraving (Intaglio Process) techniques	50
2.	Sessional Work	20

Unit 1: The students in the class are expected to opt for anyone of the following media depending upon the facilities available in their schools 120 Pds.

(a) Serigraphy.

1. The history of stencils and silk screen.
2. Methods and materials.
3. The use and maintenance of the squeeze.
4. Sealing, registration for colour, work and preparation for printing.
5. Solvents for cleaning, use and characteristics of printing inks.
6. Mounting and finishing the print.

OR

(b) Lithography 120 Pds.

1. Introduction: Short history and the methods and material used in producing lithographic prints.
2. The use and characteristics of the Litho stone/Zinc plates.
3. The use of lithographic chalks and ink (Tusche).
4. Preparing for printing and use of various chemicals inking and taking proofs.

5. Papers used in lithography and getting the final Print.

6. Finishing and mounting the print.

OR

(c) Etching and Engraving (Intaglio Process) 120 Pds.

1. Introduction to intaglio technique with a short history, methods and materials, Etching press.

2. Preparing the plate and laying the ground (Resist) and Inking.

3. Characteristics of different types of grounds.

4. Characteristics and use of various acids.

5. Colour etching, use of stencils and marks.

6. Finishing and mounting the prints.

Unit2: Sessional Work 48Pds.

Three selected prints prepared during the course by the candidate and certified by the school authorities as works done in the school and to be placed before the external examiner for assessment.

Note: The time table to be so framed as to allow the students to work continuously for minimum of two periods at a stretch.

Guidelines for Evaluation of Practical

1. Marking Scheme:

Part I: Graphic-Composition (Print Making)

(i)	Emphasis on the subject	10	
(ii)	Handling on the material and technique of print-making	15	50 marks
(iii)	Composition and quality of print	25	

Part II: Sessional Work

Three selected Prints (7+7+6 marks for 3 prints) = 20 marks

Note: Sessional work will also be evaluated on the same pattern.

2. Format of the questions:

Part I: Graphic Composition (print-making) 50 marks

Choose one of the print-making medium available and taught in your school viz. serigraphy, lithography, etching and engraving.

Make a Graphic-Composition on anyone of the five subjects given below according to the possibility and suitability of the medium:

(Note: Any five suitable subjects for "Graphic-Composition (Print-making)" are to be decided by by the internal and external examiners jointly in accordance with the instructions are to be

mentioned here).

Make use of line, tone and texture, exploiting the medium fully to realize composition.

Print your composition in one or two colours.

Pay special attention to print quality and cleanliness. Submit two identical prints along with all the rough layouts as your final submission.

Size of the plate:

(i) Serigraphy 30 cm x 20 cm.

(ii) Lithography 30 cm x 20 cm.

(iii) Etching & engraving 30 cm x 20 cm.

3. Instructions to decide the subjects for Graphic-Composition (Print-making):

1. The external and internal examiners, jointly are to select/decide five subjects suitable for Graphic-Composition (Print-Making).
2. Each subject should be so designed that the candidate may get a clear-cut idea of the subject, however, any candidate can perceive a subject in his/her own way but Graphic quality must be maintained in the composition.
3. The examiners are free to select/decide the subjects, but these should be according to the standard of class XII and environment of the school/candidates.

   Some identified areas of the subjects for Graphic-Composition (Print-making) are given below in which some more areas may be added, if needed:

   (i) Affairs of family, friends and daily life.

   (ii) Affairs of Professionals.

   (iii) Games & Sports Activities.

   (iv) Nature.

   (v) Fantasy.

   (vi) National, religious & cultural events and celebrations.

   (vii) Ideas-personal, social, local, provincial, national or international.

4. Instructions to the examiners

1. Candidates should be given one hour break after first three hours.
2. Work of the candidates for part I & II is to be evaluated on the spot by the external and internal examiners jointly.
3. Each work of parts I & II, after assessment, is to be marked as examined and duly signed by the external and internal examiners.

Some Reference Books Suggested for Teachers.

1. "The Techniques of Graphic Art", by H. Van Kruihingen.
2. "Printing Making", Harvewy Daniels (Hamlym).
3. "Art is Manual for Silk Screen Print Making", by Heavy Shockler.

4. "Printing Making today", by Jules Helles.
5. "Silk Screen Techniques", J.I. Biege Leison, Dover Publication, New York.
6. "Introducing Screen Printing", Anthony Kinsey Walson Guplill, New York.
7. "The Art and Craft of Screen Process Printing", Kosloff, All the Bruce Publishing Co., New York.
8. "Practical Screen Printing", Stephen Russ, Studio Vista Walson Auptill, New York.
9. "Artists Manual for Silk, Screen Print making", Harry Shekler, American Artist's Group' New York.
10. "Lithography", Vau Nostrav, Reinnold.
11. "Lithography for Artists", Standley Loues, Oxford University Press.
12. "Linocuts and Woodcuts", Michael Rothemstein Studio Vista, London.
13. "Relief Printing", Michael Rothenstein Studio Vista, London.
14. "Etching, Engraving and Intaglio Printing", Anthony Gross, Oxford University Press.
15. "The Art of Etching", E.S. Sumaden Gouslable, London.

(c) Sculpture (Code No. 051)

Introduction

The Course in Sculpture at Senior Secondary stage as an elective subject is aimed at developing aesthetic sense of the students through the under standing of various important, well known aspects and modes of Visual Art expression in India's rich cultural heritage from the period of Indus Valley to the-present time. It encompasses also a wide range of practical exercises in making of various sculptures for developing their mental faculties of observation, imagination and creation and the physical and technical skills.

Objectives

(A) THEORY (History of Indian Art)

Note: As the syllabus of Sculpture (Theory) is the same as that of Painting (Theory), its objectives are same.

(B) PRACTICALS

The aims is to introduce the student to the fundamentals of making sculptures. All assignments should be designed to understand problems of volume, weight, play of form in space etc., as against rendering on flat two dimensional. Adequate technical skills may be provided depending on the facilities available.

CLASS XI (THEORY)

One Theory Paper **Time: 1 Hour** **30 Marks**

Unitwise Weightage

Units		Marks
HISTORY OF INDIAN ART		
1.	Art of Indus Valley	10
2.	Buddhist & Jain Art	10
3.	Temple Sculpture and South Indian Bronze	10

Note: The Syllabus of Sculpture (Theory) for Class XI is the same as that of Painting (Theory) for Class XI given earlier.

CLASS XI (PRACTICALS)

One Paper **Time: 6 Hours** **70 Marks**

Unitwise Weightage

Units	Marks
1. Modelling in Relief (in clay or plaster Paris)	25
2. Modelling in Round	25
3. Sessional Work	20

Unit 1: Modelling in Relief on given subjects from life and nature. **60 Pds.**

Unit 2: Modelling in Round on given subjects from life and nature. **60 Pds.**

Handling of clay and its techniques, pinching, coiling, rolling etc.

Unit3: Sessional Work **40 Pds.**

Four selected pieces of works prepared during the course by the candidate and certified by the school authorities as works executed in the school are to be placed before the examiners for assessment.

Note: The time table to be so framed as to allow the students to work continuously for minimum of two periods at a stretch.

CLASS XII (THEORY)

One Theory Paper **Time: 1 Hour** **30 Marks**

Unitwise Weightage

Units		Marks
History of Indian Art		
1.	The Rajasthani and Pahari School of Miniature Painting	10
2.	The Mughal and Deccan School of Miniature Painting	10
3.	The Bengal School of Painting and the Modern Trends in Indian Art	10

Note: The Syllabus of Sculpture (Theory) for Class XII is the same as that of Painting (Theory) for Class XII given earlier.

CLASS XII (PRACTICAL)

One Paper **Time: 6 Hours** **70 Marks**

Unitwise Weightage

Units		**Marks**
1.	Modelling in Relief (Clay and Plaster of Paris)	25
2.	Modelling in Round (clay and Plaster of Paris	25
3.	Sessional Work	20

Unit 1:	Modelling in Relief*	**60 Pds.**
Unit 2:	Modelling in Round*	**60 Pds.**
Unit 3:	Sessional Work	**48 Pds.**

Four pieces of Works prepared during the course selected by the candidate and certified by the school authorities as work executed in the school are to be placed before the examiners for assessment.

Use of clay Composition in hollow for baking.

*Modelling of simplified human figures, birds, animals and plants in relief and round. Geometrical shapes like cube, cone, cylinder, etc., and their composition in relief as an exercise in design study of textures. Use of plaster of Paris.

Note: The time table to be so framed as to allow the students to work continuously for minimum of two periods as a stretch.

Guidelines for evaluation of Practical

1. Marking Scheme:

Part I:	**Modelling in Relief**			**25 Marks**
	(i)	Composition including emphasis on the subject	10	
	(ii)	Handling of media	10	
	(iii)	Creative approach & overall impression	5	
Part II:	**Modelling in Round**			**25 Marks**
	(i)	Composition including emphasis on the subject	10	
	(ii)	Handling of media	10	
	(iii)	Creative approach and overall impression	5	
Part III:	**Sessional Work**			**20 Marks**

Four works of Sculpture consisting of:

(a)	(i)	One Sculpture in Relief(High Relief)	5

(ii)One Sculpture in Relief (Low Relief) 5

(b) Two Sculpture in round 10

Notes: Sessional work will also be evaluated on the same pattern.

2. Format of the questions:

Part I: Modelling in Relief:

Make a Sculpture in Relief (low/high) on anyone of the following five subjects, The size should be within 25 to 30 cm. (horizontally or vertically) and about 4 cm. in thickness from the board.

(Note: Any five suitable subjects for "Modelling in Relief' are to be decided by the external and internal examiners jointly in accordance with the instructions and are to be mentioned here).

Part II: Modelling in Round:

Prepare a Sculpture in round, in clay medium, on anyone of the following five subjects. The height should be within 25 to 30 cm. horizontally or vertically.

Note: Any five suitable subjects for "Modelling in Round" are to be decided in accordance with the instructions and are to be mentioned here strictly just before the start of the examination for Part II. '

3. Instructions to decide the subjects for Modelling in Relief and Round:

(1) The examiners are to select/decide five subjects suitable for Modelling in Relief and five subjects for Modelling in round. The subjects for "Modelling in Round" are to be conveyed to the candidates strictly just before the start of the examination for Part II.

(2) Each subject should be so designed that the candidate may get a clear-cut idea of the subject, however, a candidate can perceive a subject in his/her own way. Distortion of human/animal forms may be allowed.

(3) Choice of high or low relief should remain open to the candidates.

(4) The examiners are free to decide the subjects but they should be according to the standard of class XII and environment of the school/candidates. Some identified areas of the subjects for Modelling in Relief are given below in which some more areas may also be included:

(i) Nature Study;

(ii) Design, natural, decorative, stylized and geometrical:

(iii) Family, friends and daily life;

(iv) Birds and animals;

(v) Games and sports activities;

(vi) Religious, social and personal activities;

(vii) Cultural activities;

(viii) Ideas - Personal, social, local, provincial, national and international.

4. General instructions to the examiners:

1. Candidates should be given one hour break after first three hours.
2. Work of the candidates of Parts I, II and III, is to be evaluated on the spot by the external and internal examiners jointly.
3. Each work of Parts I, II and III, after assessment, is to be marked as examined and duly signed by the external and internal examiners.

Some Reference Books Suggested for Teachers:

1. "Indian Sculpture", by Chintaman Kar.
2. "Exploring Sculpture", by Jan Amdell Mills & Boon, London.
3. "The Technique of Sculpture", John W. Mills, P.T. Patsford Ltd., London!
4. "A History Sculpture of the world", Shelden Cneey, Thame and Hudson, London.
5. "Form and Space", Edward Their, Thomes and Hudson; London.
6. "Sculpture and Ideas", Michael F. Andrews.
7. "Modern Sculpture", Jean Selz, Heinemann, London. '
8. "Creative Carving", (Material techniques appreciation), Dons Z. Meilach, Pritam Publishing.

(D) Applied Art (Code No. 052)

Introduction

The Course in Applied Art (Commercial Art) at Senior Secondary Stage as an elective subject isaimed to develop aesthetic sense of the students through the understanding to various important, well known aspects and modes of Visual Art expression in India's rich cultural heritage from the period of Indus Valley to the present time. It encompasses also a wide range of practical exercises in Commercial Art for developing their mental faculties of observation, imagination, creation and physical and technical skills.

Objectives

(A) THEORY (History of Indian Art)

Notes: As the syllabus of Applied Art-Commercial Art (Theory) is the same as that of Painting (Theory), its objectives are same.

(B) PRACTICALS

The purpose of introducing practical exercises in Applied Art (Commercial Art) is to help and

able the students to develop professional competence in making Model Drawing Lettering, layout Preparation and poster so that they can link their lives with productivity.

CLASS XI (THEORY)

One Theory Paper **Time: 1 Hour** **30 Marks**

Unitwise Weightage

Units		Mark
HISTORY OF INDIAN ART		
1.	Art of Indus Valley	10
2.	Buddhist and Jain Art	10
3.	Temple Sculpture and South Indian Bronze	10

Note : The Syllabus of Applied Art-Commercial Art (Theory) for Class 'XI is the same as that ofPainting (Theory) for Class XI given earlier.

CLASS XI (PRACTICALS)

One Paper **Time: 6 Hours** **70 Marks**

Unitwise Weightage

Units		Mark
1.	Drawing	25
2.	Lettering and layout	25
3.	Sessional Work	20

Unit 1: **Drawing** **60 Pds.**

Drawing from Still-Life and Nature, pencil monochrome/colour.

Unit 2: **(a) Lettering** **60 Pds.**

(i) Study of lettering of Roman and Devnagri Scripts

(ii) Identification of some Type=faces and their sizes

(b) Layout

Making a simple layout with lettering as the main component.

Unit 3: **Sessional Work** **48 Pds.**

Submission of portfolio consisting of:

(a) Five selected drawings in any media done during the year including minimum three

lives. (10)

(b) Two selected works in chosen subject done during the year. (10)

Note: The time table to be so framed as to allow the students to work continuously for minimum of two periods at a stretch.

CLASS XII (THEORY)

One Theory Paper **Time: 1 Hour** **30 Marks**

Unitwise Weightage

Units	Marks
HISTORY OF INDIAN ART	
1. The Rajasthani and Pahari School of Miniature Painting	10
2. The Mughal and Deccan School of Miniature Painting	10
2. The Bengal School of Painting and the Modern Trends in Indian Art	10

Note: The Syllabus of Applied Art-Commercial Art (Theory) for Class ~II is the same as that of Painting (Theory) for Class XII given earlier.

CLASS XII (PRACTICAL)

One Paper **Time: 6 Hours** **70 Marks**

Unitwise Weightage

Units		Marks
1.	Illustration	25
2.	Poster	25
2.	Sessional Work	20

Unit 1: Illustration **60 Pds.**

Study of techniques of Illustration on given subjects and simple situations supported by Drawing from life and outdoor sketching in different media suitable for printing.

Unit 2: Poster **60 Pds.**

Making a poster with specified data and slogan on a given subject in two or four colours.

Unit 3: Sessional Work **48 Pds.**

Submission of portfolio consisting of:

(i) Five selected drawings in any media done during the year including minimum of two illustrations (10)

(ii) Two selected posters in chosen subject (10)

Note: The time table to be so framed as to allow the students to work continuously for minimum of two periods at a stretch.

Guidelines for Evaluation of Practical

1. Marking Scheme:

Part I:	**Illustrations**			
	(i)	Composition including quality of drawing	10	
	(ii)	Emphasis on the subject with a specific situation	10	25 marks
	(iii)	Reproducing quality and overall impression	5	
Part II:	**Poster**			
	(i) Layout and Lettering		10	
	(ii) Emphasis on the subject 5		25 marks	
	(iii) Proper colour scheme and overall impression		10	
Part III :	**Sessional Work**			
	(i)	Five selected drawings in any media including minimum of two illustrations	10	
	(ii)	Two selected posters in chosen subjects	10	20 marks

Note: Sessional Work will also be evaluated on the same pattern,

Format of the questions:

Part I: **llustration**

Make an illustration in black and white in any colour media on anyone of the following five subjects with a specific situation.

Size of the illustration: 30 cm x 22 cm.

Note: Any five suitable subjects or illustration, decided by the external and internal examiners jointly in accordance with the instructions are to be mentioned here.

Part II: **Poster**

Prepare a poster-design with specified data and slogan in English/Hindi language, in three flat colours, on anyone of the following five subjects. The designing of the poster should have balanced use of typography and illustration.

Size of the Poster-design: 1/2 imp size.

Note: Any five suitable subjects for poster design decided by the external and internal examiners jointly in accordance with the instructions and are mentioned here, strictly just before the start of the examination for Part II.

3. (A) Instructions to decide the subjects for illustration:

1. The examiners are to select/decide five suitable subjects.

2. Each subject should be given a specific situation, which is a main characteristic of an illustration.

3. Each subject should be so designed that the candidate may get a clear-cut idea of the subject and they can illustrate a specific situation based on given subject areas.

4. The examiners are free to decide the subjects but these should be according to the standard of the Class XII and environment of the school/candidates.

   Some identified areas of the subjects for illustration are given below, in which some more areas may be added if needed.

Subject with a specific situation:

(i) Family and friends in daily life.

(ii) Professionals/professions.

(iii) Games and sports.

(iv) Nature.

(v) National events and celebrations. :

(vi) Religious events and festivals.

(vii) Culture-Dance, Drama, Music and Art.

(B) Instructions to decide the subjects for Poster-design:

1. The examiners are to select/decide five subjects suitable for Poster-design.

2. Each subject should be given a specified data and slogan.

3. The data and slogan should be so framed/designed that the candidates may get a clear-cut idea of the subject.

4. The examiners must give the subjects data and slogan according to the standard of Class XII and environment of the School/candidates.

   Some identified areas for poster-design are given below, in which some more areas/ subjects may be added.

1. For Advertisement on:

(i) Exercusion/Tourism

(ii) Cultural activities.

(iii) Community & Nature Development

(iv) Ideas-Social, national and international.

(v) Commercial products.

2. Instructions to the examiners:

1. Candidates should be given one hour break after first three hours.
2. Work of the candidates for Parts I, II & III is to be evaluated on the spot by the external and internal examiners jointly.
3. Each work of Parts I, II & III, after assessment, is to be marked as examined and signed by the external and internal examiners.

Some Reference Books Suggested for Teachers

1. Typolog-G.M. Rege, Bombay.
2. Kalatmak Lykhai, Published by D.A. V.P.
3. Figure Painting in Water Colour, Charles Reid Watson, Guptill Publication.
4. Walter T. Foster - Objective Drawing.
5. Walter T. Foster - Human Figure.
6. Walter T. Foster- Head Study.
7. Walter T. Foster - Animal Study.
8. Walter T. Foster - Landscape.
9. Applied Art Handbook - G.M. Rege, Bombay.

Some Reference Books for Theory portion of Painting, Graphics, Sculpture and Applied Art:

भारत की चित्रकला	राय कृष्णदास, भारती भण्डार, लीडर प्रेस, इलाहाबाद (उ. प्र.)
2. नवीन भारतीय चित्रकला शिक्षण पद्धति	प्रो. रामचन्द्र शुक्ल, किताब महल प्रा. लि, इलाहाबाद (उ. प्र.)
3. भारतीय चित्रांकन	डॉ. रामकुमार विश्वकर्मा, बिशनलाल भार्गव एण्ड सन्स, कटरा, इलाहाबाद (उ. प्र.)
4. भारतीय चित्रकला का इतिहास	डॉ. अविनाश बहादुर वर्मा, प्रकाश बुक डिपो, बरेली (उ. प्र.)
5. भारतीय कला और कलाकार	ई. कुमारिल स्वामी, प्रकाशन विभाग, सूचना और प्रसारण मंत्रालय, भारत सरकार, पटियाला हाउस, नई दिल्ली–110 001
6. भारतीय चित्रकला का बृहद इतिहास	वाचस्पति गैरोला, चौखाम्मा संस्कृत प्रतिष्ठान, बंगलो रोड, जवाहर नगर, दिल्ली. 100 007
7. रूपप्रद कला के मूलाधार	डॉ. शिवकुमार शर्मा एवं डा. रामावतार अग्रवाल, लायल बुक डिपों, निकट गवर्नमेण्ट कालिज, मेरठ (उ.प्र.)
8. कला विलास भारतीय कला का विकास	डॉ आर. ए. अग्रवाल लायल बुक डिपो, निकट गवर्नमेण्ट कालिज, मेरठ (उ. प्र.)
9. भारतीय चित्रकला	डॉ एस.एन. सक्सेना, मनोरमा प्रकाश्न, 299, मीरपुर कैण्ट, कानपुर (उ.प्र.) 208004
10. भारतीय चित्रकला का विकास	डॉ. चिरंजीलाल झा, लक्ष्मी कला कुटीर, नया गंज, गाजियाबाद (उ.प्र.) 201001
11. कला के मूल तत्व	डॉ. चिरंजीलाल झा, लक्ष्मी कला कुटीर, नया गंज, गाजियाबाद (उ.प्र.) 201001
12. शिल्प कथा	नन्दलाल बसु, साहित्य भवन लि., इलाहाबाद (उ. प्र.)

13. भारत का मूर्तिशिल्प	डॉ. चार्ल्स एल, फाबरी, राजपाल एण्ड सन्स, कश्मीरी गेट, दिल्ली– 110 006
14. कला और कलम भारतीय चित्रकला का आलोचनात्मक इतिहास	डॉ. गिर्राज किशोर अग्रवाल, ललिता कला प्रकाशन, 27–ए, साकेत कालोनी, अलीगढ़ (उ.प्र.) 202001
15. भारतीय मूर्तिकला परिचय	-do-
16. आधुनिक भारतीय चित्रकला	-do-
17. भारत की चित्रकला का संक्षिपत इतिहास	डॉ. लोकेशचन्द्र शर्मा गोयल पब्लिशिंग हाउस, सुभाष बाजार, मेरठ (उ. प्र.)
18. रवि वर्मा, अमृता शेरगिल, रामाकिंकर हुसैन, हेब्बर, यामिनी राय, देवी प्रसाद राय चौधरी, पर लघु–कथाएं तथा समकालीन भारतीय कला	ललित कला आकादमी, रवीन्द्र भवन, कॉपरनिक्स मार्ग, (निकट मण्डी हाउस), नई दिल्ली 110 001 तथा ल.क.अ. के क्षेत्रीय कार्यालयों पर भी उपलब्ध
19. भारतीय कला	डॉ. वासुदेव शरण अग्रवाल, पृथ्वी प्रकाशन, वाराणसी (उ.प्र.) 221005
20. Hindustan Masavri	By Dr. Anis Farooqi
21. The Heritage of Indian Art	Dr. Vasudev Sharan Agrawal
22. Studies in Indian Art	Dr. Vasudev Sharan Agrawal, Banaras Hindu University Publication, Varanasi (U.P.)
23. India Painting	Percy Brown, YMCA Publishing House, Massey Hall, Jai Singh Road (Near Parliament Street) New Delhi-110001.
24. History of Indian and Indonesian Art	A.K. Coomaraswamy, Dover Publication, Inc., New York.
25. South Indian Bronzer	C Civarama Murti, La]ew Delhi-I 10001.
26. Discovering Indian Sculpture, A Brief History	Dr. Charles L. Fabri, Affiliated East-West Press Pvt. Ltd., C-57, Defense Colony, New Delhi-II 0024.

27. Story of Indian	Art S.K. Bhattacharya, Atma Ram & Sons, Kashmiri Gate, Delhi-I 10006.
28. Panorama of Indian Painting	Publication Division, Ministry of Information and Broadcasting Government of India, Patiala House, Tilak Marg, New Delhi-11 0001. (Also available at P. D. Sales Emporia throughout the country).
29. Glory of Indian Miniature	Dr. Daljeet, Mahindra Publications, R-5/II, New Raj Nagar, Ghaziabad, Utttar Pradesh -201002. .
30. Indian Painting	C. Civarama Murti,
31. Indian Artists through the ages	R.K. Chopra, R.K.C. Publications H-49, Raghu Nagar, Pankha Road, New Delhi-II 0045.
32. Contemporary Indian Artists	Geeta Kapoor, Vikas Publishing House, Delhi
33. Monographs on Amar Nath Sehgal. Amrita Shergil, Abanindra Nath Tagore, D.P. Roy Chowdhury, Dhanaj Bhagat, Gaganendra Nath Tagore, K.K. Hebbar, Krishna Reddy, M.F. Husain, Rabindra Nath Tagore, Jamini Roy, P.V. Janakiram, Lalit Kala Contemporary	Lalit Kala Akademi, Rabindra Bhawan, Copernicus Marg, (New Mandi House), New Delhi-II 000 1.
34. Monographs, Portfolios and prints of contemporary/Modern paintings and sculptures which are included in the course of study.	National Gallery of Modern Art (Deptt. of Culture, Ministry of H.R.D. Govt. of India): Jaipur House, Near India Gate, New Delhi-110003.
35. Portfolios, books and prints of Paintings and sculptures which are included in the course of study	National Museum (Deptt. of Culture, Ministry of H.R.D.) Govt. of India), Janpath, New Delhi-1 10011
36. Contemporary Art of India	Prof. P.N. Mago N.B.T. Publishers.

29. MUSIC

(Code Nos. 31 to 36)

The syllabus in be subject has been published separately. It will be supplied to the schools on request.

30. DANCE

(Code No. 56 to 62)

The syllabus in the subject has been published separately It will be supplied to the schools on request.

CENTRAL BOARD OF SECONDARY EDUCATION
Shiksha Kendra, 2, Community Centre, Preet Vihar, Delhi - 110092, India
Tel.: 91-11-22509252-59 Fax : 91-11-22515826
E-mail : cbsedli@nda.vsnl.net.in website : www.cbse.nic.in