CS 348: Computer Networks

- SMTP; 23rd Oct 2012

Instructor: Sridhar Iyer
IIT Bombay

Email related protocols

- SMTP - Simple Mail Transport Protocol
  - rfc: 821
  - Port: 25 (u) ; 465 (s)
- POP - Post Office Protocol
  - rfc: 1725
  - Port: 110 (u) ; 995 (s)
- IMAP - Internet Mail Access Protocol
  - rfc: 1730
  - Port: 143 (u) ; 993(s)
- MIME – Multipurpose Internet Mail Extensions
  - rfc: 1521 - 1524
  - port: none

SMTP: Simple Mail Transfer Protocol

- Three Components:
  - user agents: “mail readers”
  - mail servers: “mailbox; mail queue”
  - smtp: simple mail transfer protocol
    - protocol between mail servers
    - client: sending mail server
    - server: receiving mail sever

SMTP: agents/servers

- user agents: “mail readers”
  - composing, editing, reading mail messages
  - e.g., Eudora, pine, elm, Netscape Messenger
  - outgoing, incoming messages stored on server
- mail servers:
  - mailbox contains incoming messages (yet to be read) for user
  - message queue of outgoing (to be sent) mail messages

SMTP [RFC 821]

- Uses TCP to transfer message from client to server, port 25

- Command/Response interaction:
  - commands: ASCI text
  - response: status code and phrase

SMTP functioning

- Three phases of transfer:
  - handshaking: Connection establishment
  - transfer: direct transfer from sending server (client) to receiving server (server); push-based: client sends data instead of server
  - closure: Connection termination

SMTP

- SMTP clients and servers have two main components
  - User Agents – Prepares the message, encloses it in an envelope.
  - Mail Transfer Agent (MTA) – Transfers the mail across the internet
  - To send mail, a system must have the client MTA, and to receive mail, a system must have a server MTA.

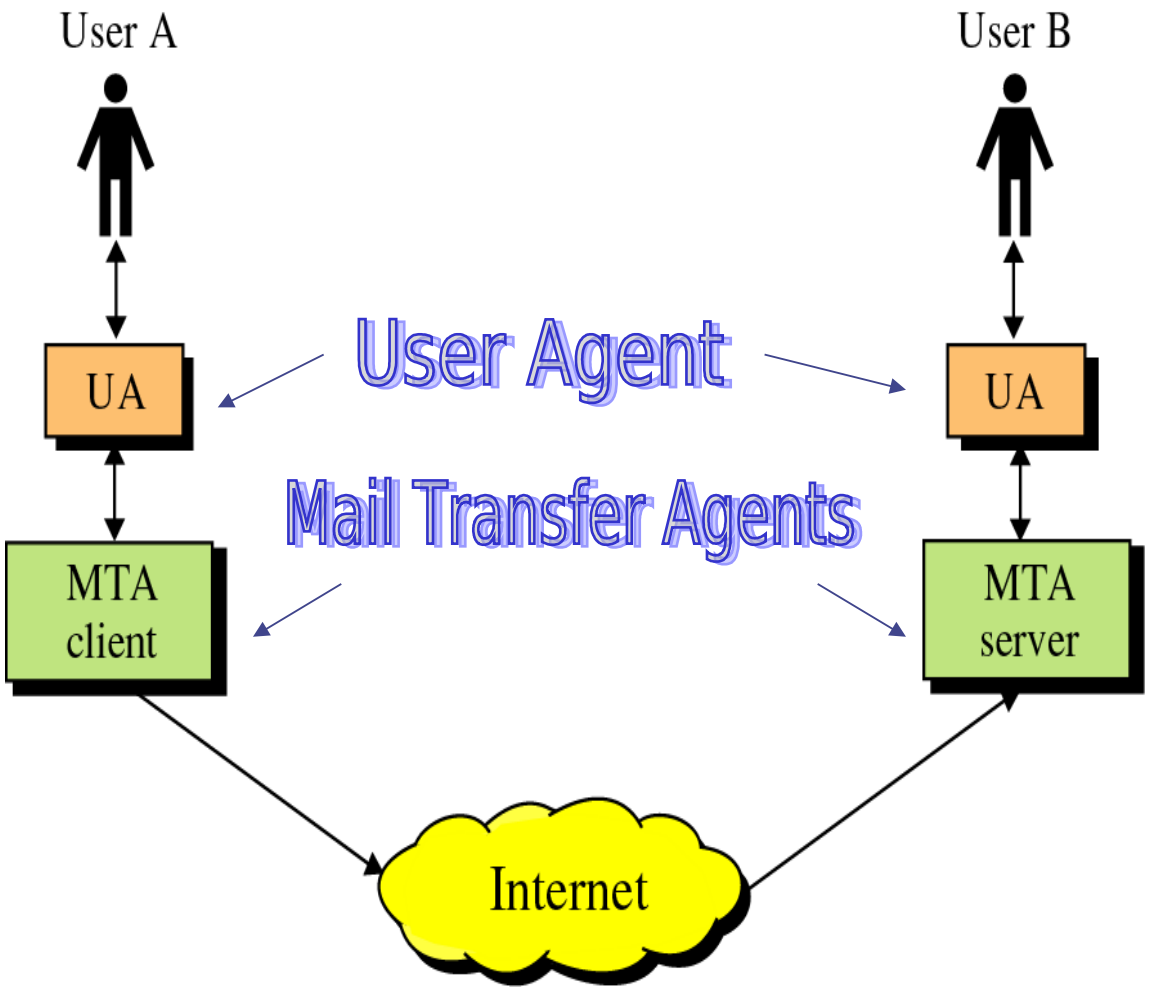

SMTP – Typical scenario

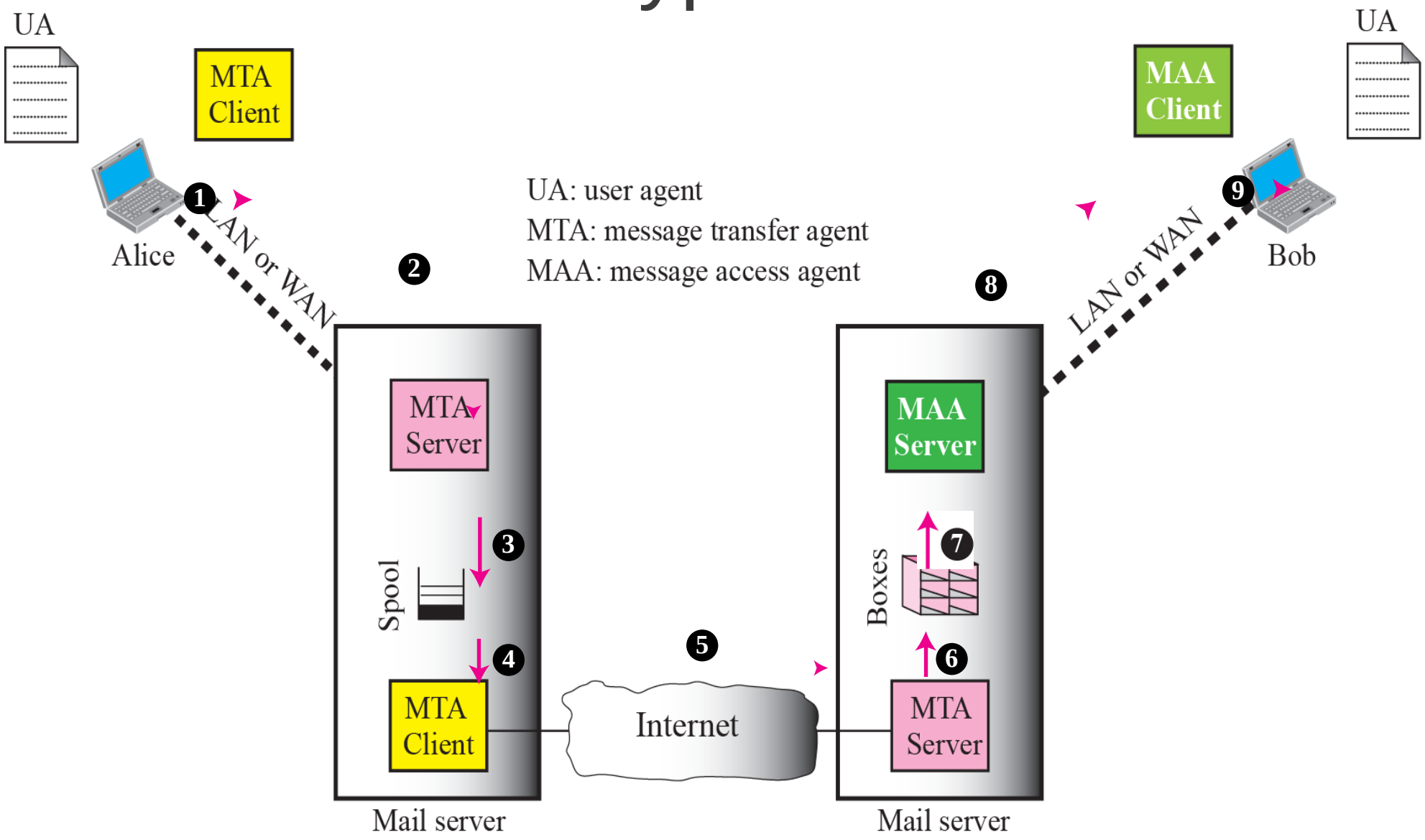

Source: Forouzan

Connection Establishment

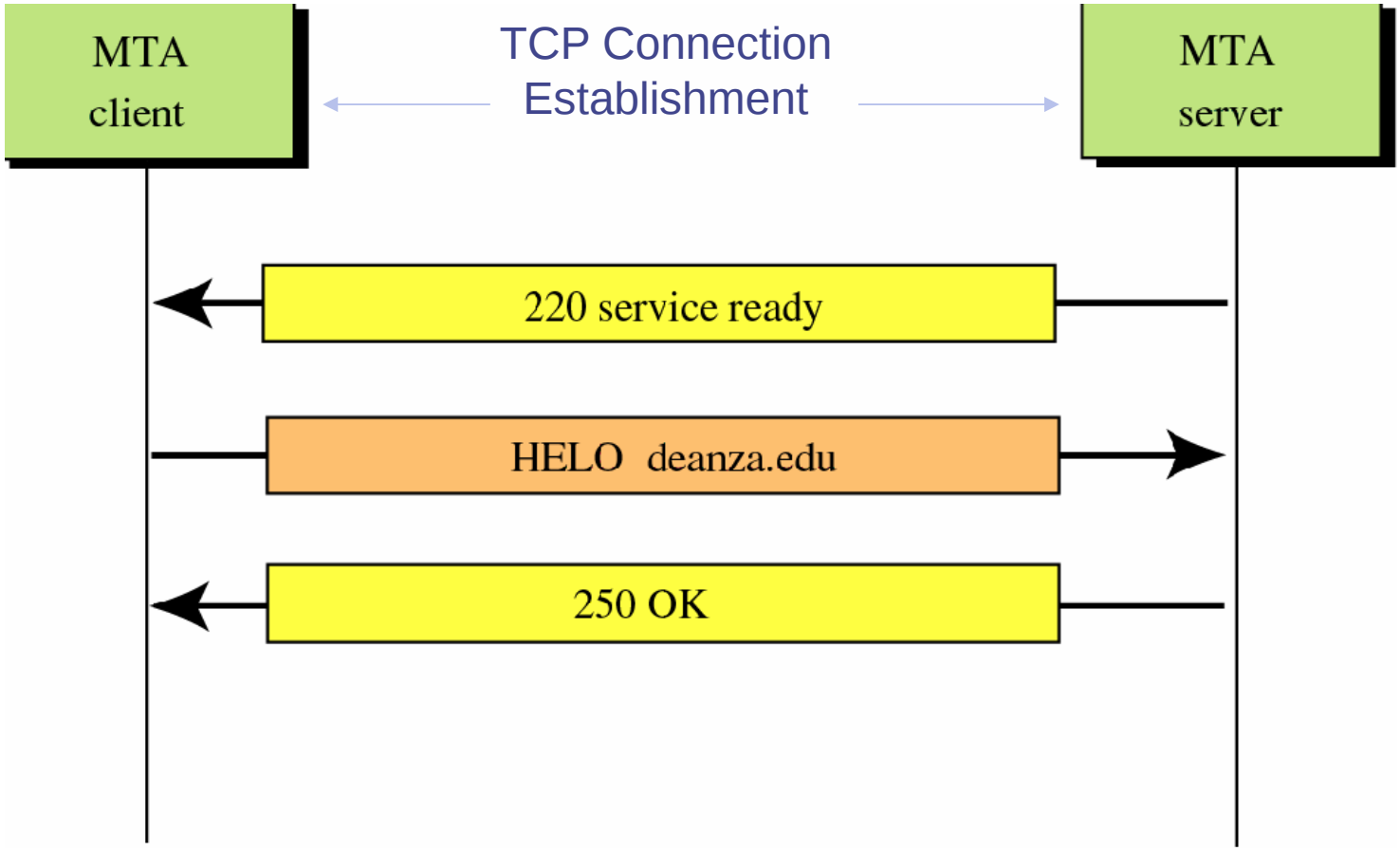

Source: Forouzan

Message Progress

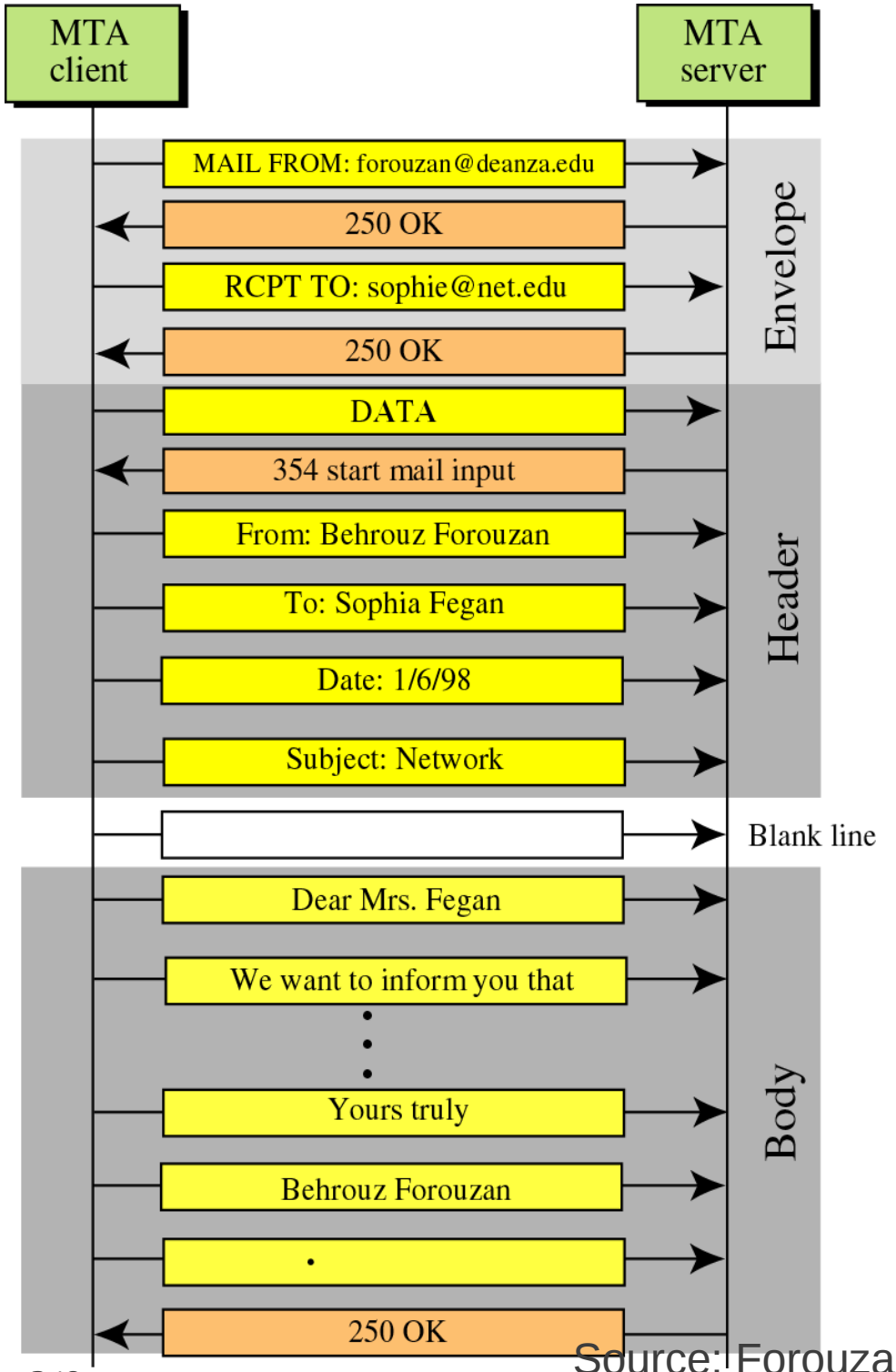

Source: Forouzan

Connection Termination

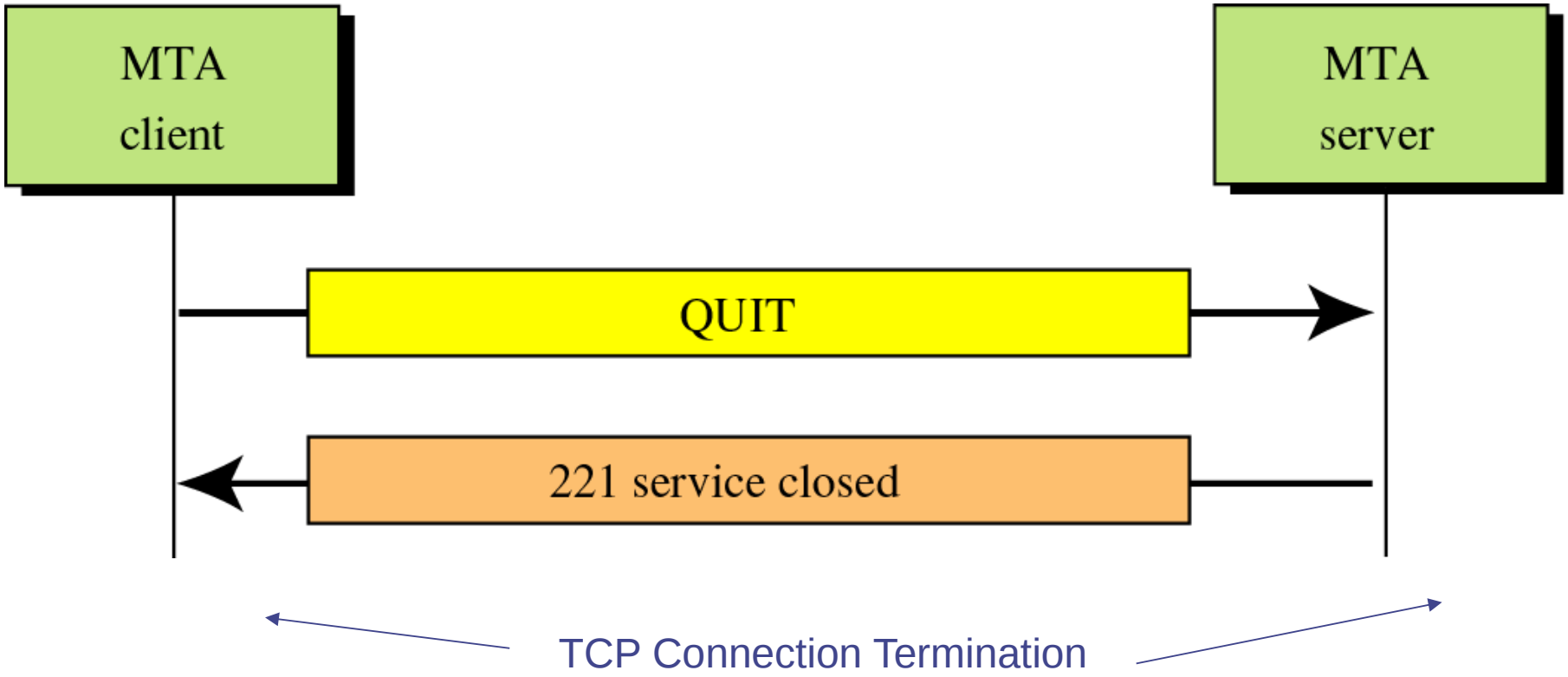

Source: Forouzan

Some SMTP Commands

- HELO
  - identifies the client to the server, fully qualified domain name, only sent once per session
- MAIL
  - initiate a message transfer, fully qualified domain of originator
- RCPT
  - follows MAIL, identifies an addressee, typically the fully qualified name of the addressee
  - for multiple addressees use one RCPT for each addressee
- DATA
  - send data line by line
  - <cr>.<cr> tells server data transfer is over

SMTP: Example

- C: telnet mailServer.iitb.edu 25
  S: 220 mailServer.iitb.edu
- C: Helo myServer.edu
  S: 250 Hello myServer.edu, pleased to meet you
- C: MAIL FROM: <xyz@myServer.edu>
  S: 250 xyz@myServer.edu... Sender ok
- C: RCPT TO: <abc@mailServer.iitb.edu>
  S: 250 abc@mailServer.edu ... Recipient ok
- C: DATA
  S: 354 Enter mail, end with "." on a line by itself
- C: Hi abc,
  C: This is uvw pretending to be xyz.
  C: .
  S: 250 Message accepted for delivery
- C: QUIT
  S: 221 mailServer.iitb.edu closing connection

POP3 and IMAP4

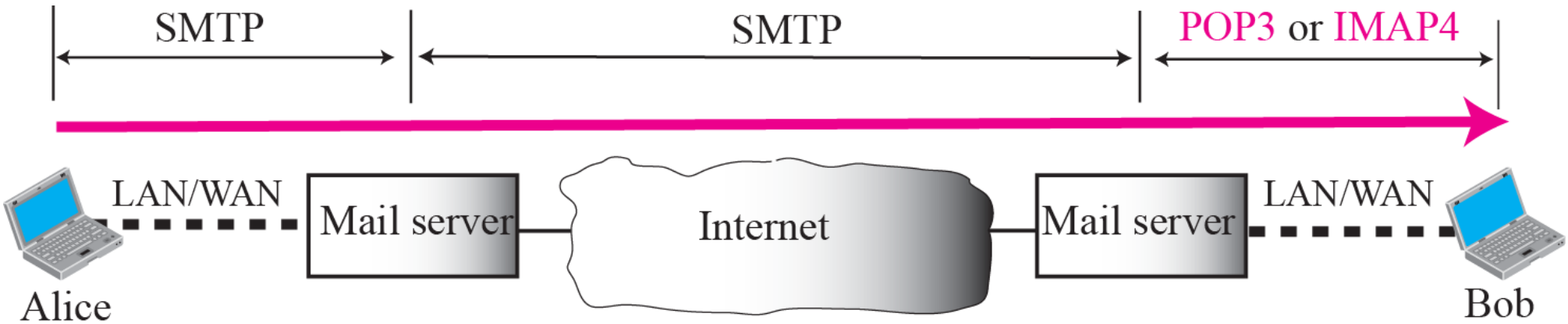

Source: Forouzan

Post Office Protocol (POP3)

- Used in conjunction with an SMTP Host
  - SMTP Host sends and receives e-mail for remote users
  - POP allows users to retreive their mail from the host
  - SMTP stores mail for unconnected hosts
- RFC 1730
- TCP Port 110

POP3 command-response

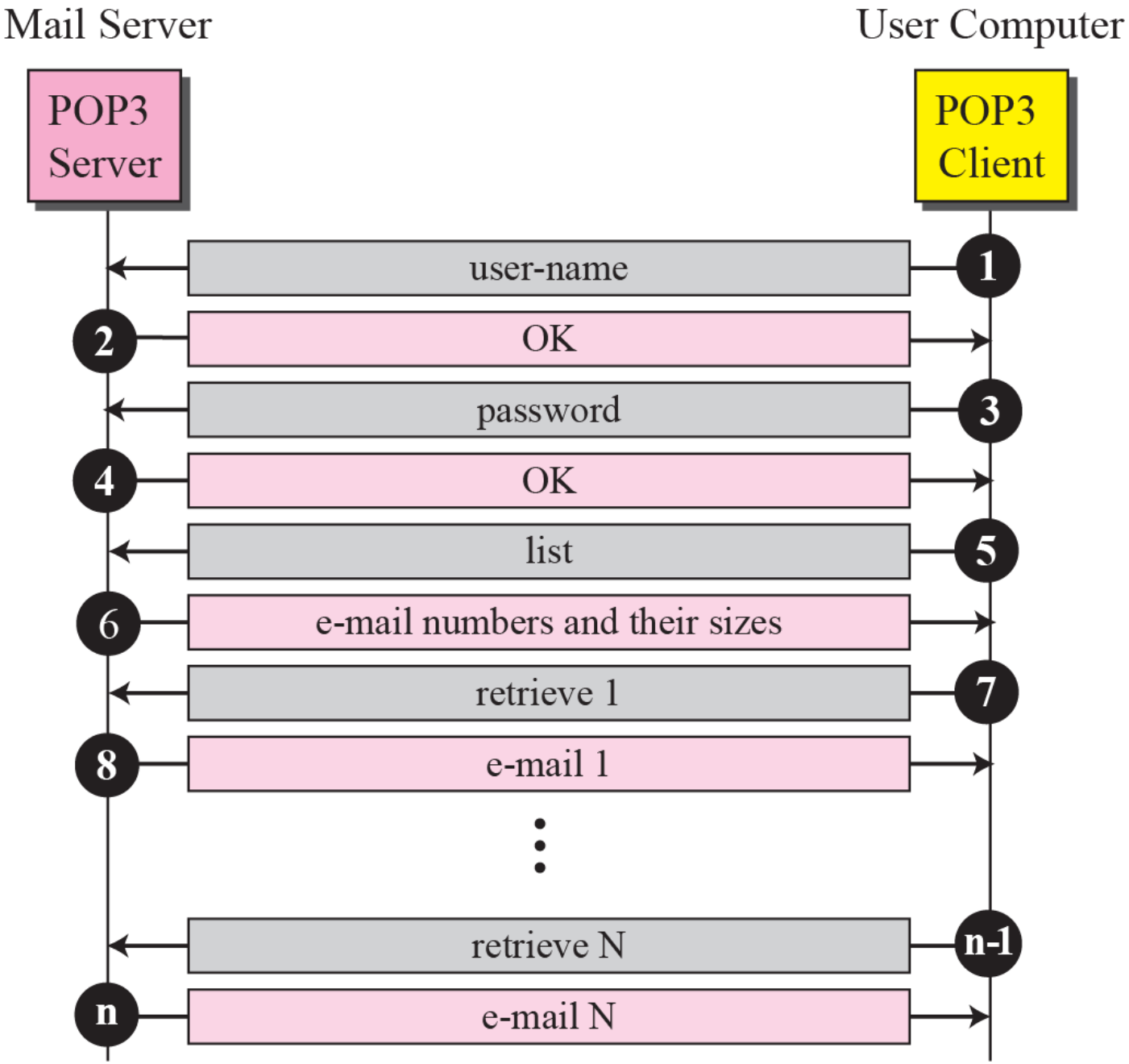

Source: Forouzan

POP3 Example

 # telnet localhost 110
Connected to localhost.ws.afnog.org
Escape character is '^]'.
+OK Hello there.
user *username*
+OK Password required.
pass *password*
+OK logged in.
stat
+OK 26 49857
retr 1
+OK 1073 octets follow.
... message
.
quit
+OK Bye-bye.
Connection closed by foreign host.

IMAP

- Developed after POP and attempts to fix POP deficiencies
  - allows keeping all mail on the server
  - allows mail categorization via folder metaphor
  - mail is easily flagged (answered, draft, deleted, seen, recent); this isn’t the same on all servers
  - provides for multiple connections to the server

IMAP - process

- make connection
- send user credentials (userid and password)
  - repeat until done
    - send a command
    - read response
  - disconnect

IMAP - Commands

login
list
status
examine
select
create, delete, rename
fetch
store
close

expunge
copy
idle
lsub, subscribe, unsubscribe
logout
capability, getquotaroot, getacl

IMAP Example

telnet localhost 143

Connected to localhost.ws.afnog.org.

Escape character is '^]'.

* OK [CAPABILITY IMAP4rev1 UIDPLUS CHILDREN NAMESPACE THREAD=ORDEREDSUBJECT

THREAD=REFERENCES SORT QUOTA IDLE ACL ACL2=UNION STARTTLS] Courier-IMAP ready.

Copyright 1998-2005 Double Precision, Inc. See COPYING for distribution information.

a login *username password*

a OK LOGIN Ok.

a examine inbox

* FLAGS (\Answered \Flagged \Deleted \Seen \Recent)

* OK [PERMANENTFLAGS ()] No permanent flags permitted

* 26 EXISTS

* 0 RECENT

* OK [UIDVALIDITY 989061119] Ok

* OK [READ-ONLY] Ok

a logout

* BYE Courier-IMAP server shutting down

a OK LOGOUT completed

Connection closed by foreign host.

POP3 vs IMAP4

- With IMAP4, all your mail stays on the server in multiple folders, some of which you have created
- With POP3 you only have one folder, the Inbox folder. When you open your mailbox, new mail is moved from the host server and saved on your computer. If you want to be able to see your old mail messages, you have to go back to the computer where you last opened your mail
- With POP3 "leave mail on server" only your email messages are on the server, but with IMAP your email folders are also on the server

Web-based email – case 1

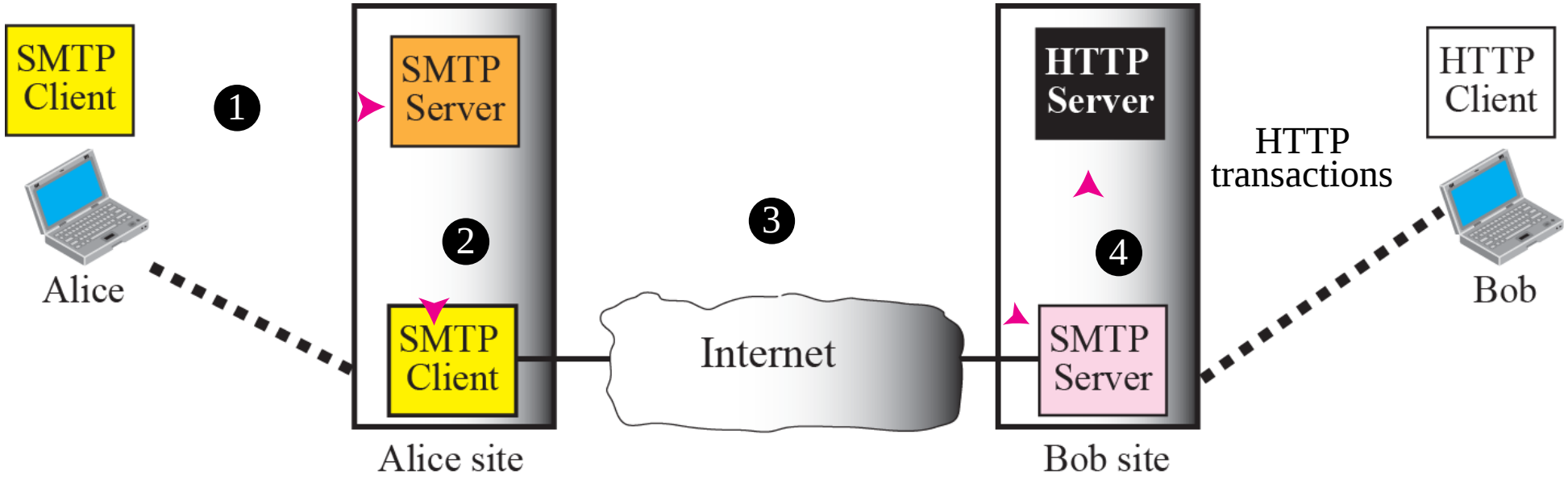

Source: Forouzan

Web-based email – case 2

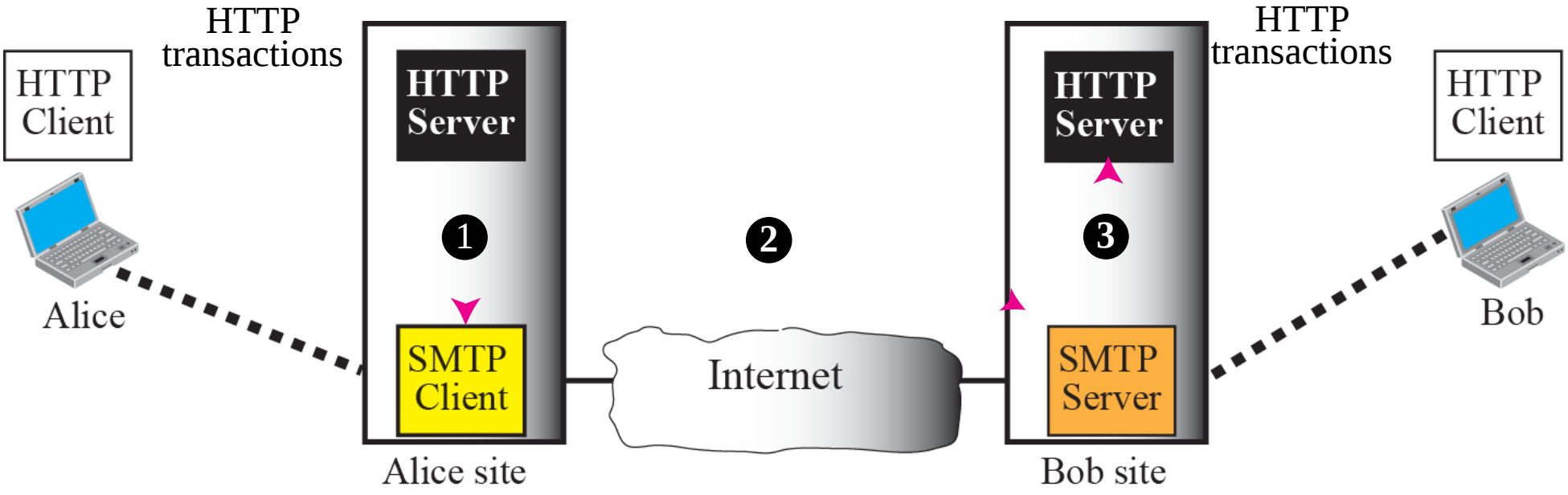

Source: Forouzan

MIME extension to SMTP

- MIME – Multipurpose Internet Mail Extensions
  - Transforms non-ASCII data to NVT (Network Virtual Terminal) ASCII data
    - Text
    - Application
    - Image
    - Audio
    - Video

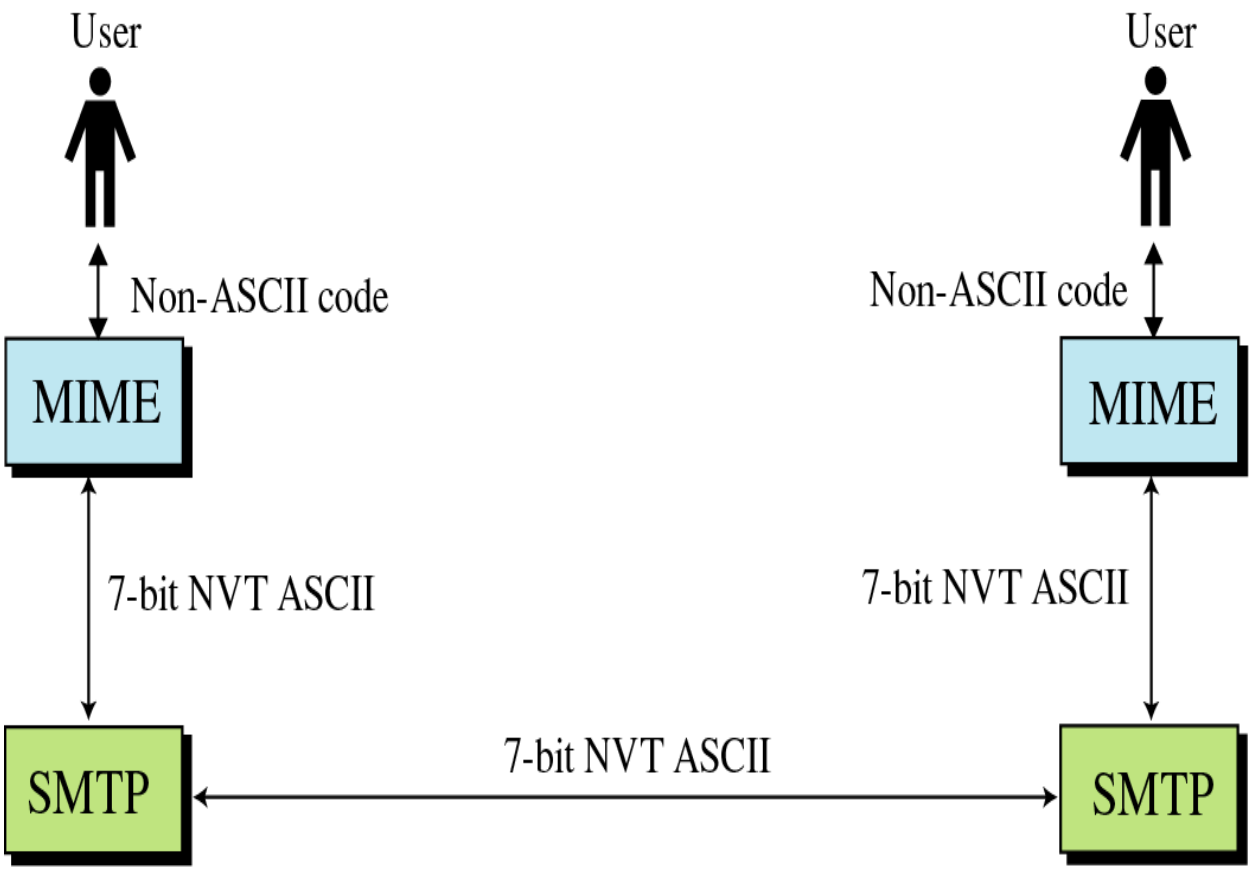

MIME – Base 64 encoding

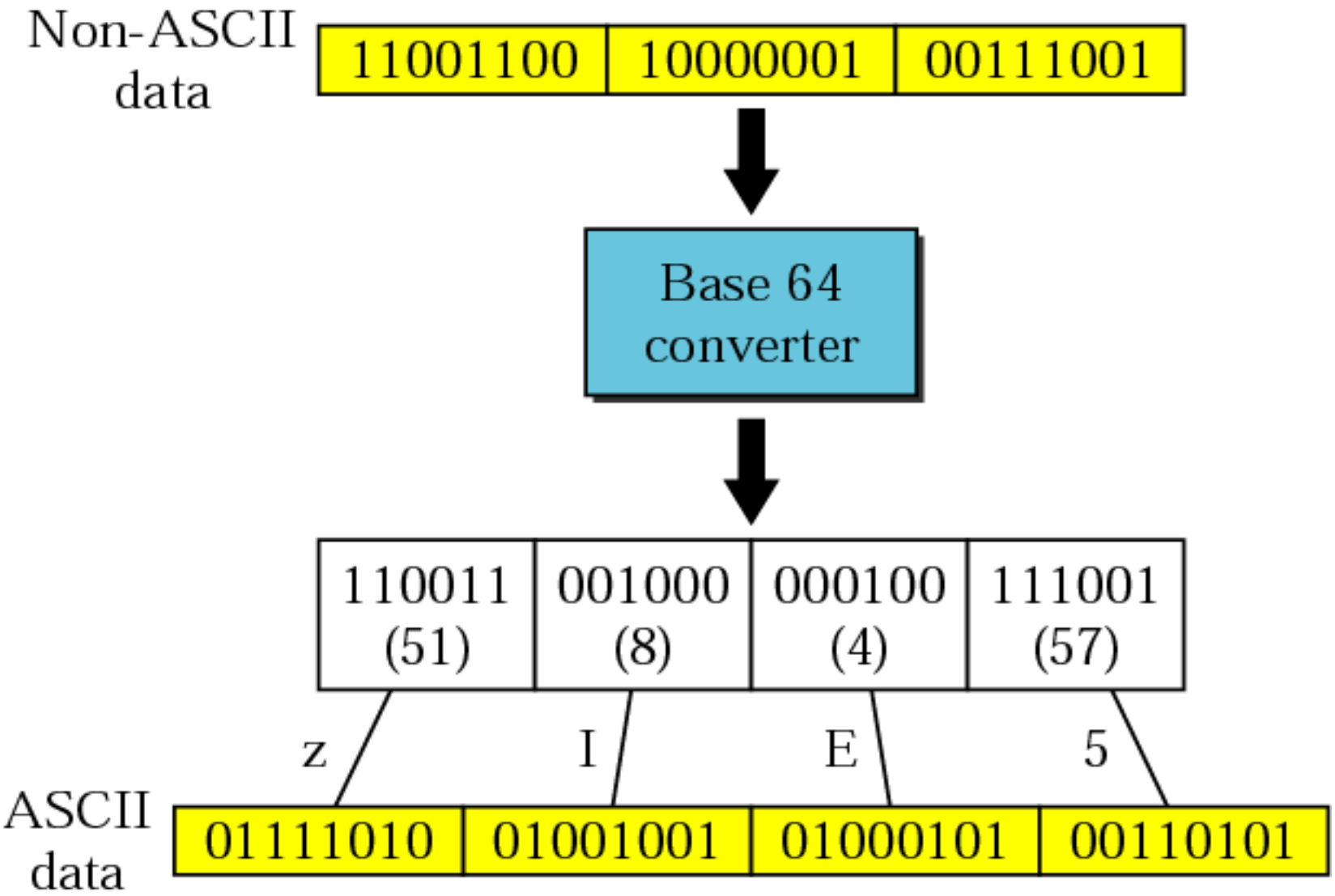

Source: Forouzan